	Technical Specification for Type Approval of Non-automatic Weighing Instruments	S/N	CNPA 76
		Rev.	2

1. This Technical Specification is enacted pursuant to Paragraph 3, Articles 25 of the Weights and Measures Act.

2. The date of promulgation, document number, date of enforcement and content of the amendment are listed as follows:

Rev.	Date of Promulgation	Document No. (Ching-Piao-Szu-Tsu)	Date of Enforcement	Content of Amendment
1	June 30, 2003	No.09240005951	July 01,. 2003	
2	Nov 9, 2012	No. 10140006810	Nov 9, 2012	Reducing some of testing items on instruments with maximum capacity greater than 100 kg.

3. This Specification is formulated with use to the following specifications:

OIML R60 Metrological regulation for load cells

4. This Specification is formulated with reference to the following international specifications:

OIML R76-1 Non-automatic weighing instruments
Part 1：Metrological and technical requirements - Tests（1992）
OIML R76-2 Non-automatic weighing instruments
Part 2：Pattern evaluation report（1993）
OIML R76-1 Non-automatic weighing instruments
Part 1：Metrological and technical requirements – Tests
Amendment 1（1994）
OIML R76-2 Non-automatic weighing instruments
Part 2：Pattern evaluation report
Amendment 1（1995）

Date of Promulgation	Bureau of Standards, Metrology and Inspection, Ministry of Economic Affairs	Date of Enforcement
Nov 9, 2012		**Nov 9, 2012**

NO GUARANTEE ON THE TRANSLATION

In any case, the original Technical Specifications in Chinese are to be evidence.

I CONTENTS

II Terminology (terms and definitions)

T.1 General definitions
T.2 Construction of an instrument
T.3 Metrological characteristics of an instrument
T.4 Metrological properties of an instrument
T.5 Indications and errors
T.6 Influences and reference conditions
T.7 Performance test

1 Scope

2 Principles of the Recommendation
2.1 Units of measurement
2.2 Principles of the metrological requirements
2.3 Principles of the technical requirements
2.4 Application of requirements
2.5 Terminology

3 Metrological requirements
3.1 Principles of classification
3.2 Classification of instruments
3.3 Additional requirements for a multi-interval instrument
3.4 Auxiliary indicating devices
3.5 Maximum permissible errors
3.6 Permissible differences between results
3.7 Verification standards
3.8 Discrimination
3.9 Variations due to influence quantities and time
3.10 Pattern evaluation tests .

4 Technical requirements for a self- or semi-self-indicating instrument
4.1 General requirements of construction
4.2 Indication of weighing results
4.3 Analogue indicating devices
4.4 Digital indicating and printing devices
4.5 Zero-setting and zero-tracking devices
4.6 Tare devices
4.7 Preset tare devices
4.8 Locking positions
4.9 Auxiliary verification devices (removable or fixed)
4.10 Selection of weighing ranges on a multiple range instrument
4.11 Devices for selection (or switching) between various load receptors-load transmitting devices and various load measuring devices
4.12 Requirements for load cells
4.13 "Plus" and "minus" comparator instrument
4.14 Instrument for direct sales to the public
4.15 Additional requirements for an instrument for direct sales to the public with price indication
4.16 Instrument similar to one normally used for direct sales to the public
4.17 Price-labeling instrument
4.18 Mechanical counting instrument with unit-weight receptor

5 Requirements for electronic instruments
5.1 General requirements
5.2 Acting upon significant faults
5.3 Functional requirements
5.4 Performance and span stability tests

6 Technical requirements for a non-self-indicating instrument
6.1 Minimum sensitivity

6.2 Acceptable solutions for indicating devices
6.3 Conditions of construction
6.4 Simple equal arm beam
6.5 Simple 1/10 ratio beam
6.6 Simple sliding poise instrument (steelyard)
6.7 Roberval and Beranger instruments
6.8 Instruments with ratio platforms
6.9 Instrument with a load-measuring device with accessible sliding poises (of the steelyard type)

7 Marking of an instrument
7.1 Descriptive markings
7.2 Verification marks

8 Metrological controls
8.1 Liability to metrological controls
8.2 Type approval
8.3 Initial verification
8.4 Subsequent metrological control

9. Special Interim Provisions
9.1 Provisions for the use of auxiliary units of measurement
9.2 Interim provisions on special applications of price computing weighing instruments
9.3 The requirements on larger capacity weighing instruments:

Annex A Testing procedures for non-automatic weighing instruments
A.1 Administrative examination
A.2 Compare construction with documentation
A.3 Initial examination
A.4 Performance tests
A.5 Influence factors .
A.6 Endurance test

Annex B Additional tests for electronic instruments
B.1 General requirements for electronic instruments under test (EUT)
B.2 Performance tests for influence factors
B.3 Performance tests for disturbances
B.4 Span stability test

Ⅲ Bibliography
Ⅳ Test report

II TERMINOLOGY

(terms and definitions)

The terminology used in this Recommendation conforms to the "International Vocabulary of basic and general terms in metrology" (1984 edition) and the "Vocabulary of legal metrology" (1978 edition). In addition, for the purposes of this Recommendation, the following definitions apply. An index of all the terms defined below is published as a separate sheet to help in finding the corresponding definitions.

T.1 General definitions

T.1.1 Weighing instrument

Measuring instrument that serves to determine the mass of a body by using the action of gravity on this body.

The instrument may also be used to determine other quantities, magnitudes, parameters or characteristics related to mass.

According to its method of operation, a weighing instrument is classified as an automatic or nonautomatic instrument.

T.1.2 Non-automatic weighing instrument

Instrument that requires the intervention of an operator during the weighing process, for example to deposit on or remove from the receptor the load to be measured and also to obtain the result.

The instrument permits direct observation of the weighing results, either displayed or printed; both possibilities are covered by the word "indication".

Note: Terms such as "indicate", "indicating component" and their derivatives do not include printing.

A non-automatic weighing instrument may be:

– graduated or non-graduated,

– self-indicating, semi-self-indicating or non-self-indicating.

Note: In this Recommendation a non-automatic weighing instrument is called an "instrument".

T.1.2.1 Graduated instrument

T.1.2.2 Non-graduated instrument

T.2.1 Main devices

Instrument allowing the direct reading of the complete or partial weighing result.

Instrument not fitted with a scale numbered in units of mass.

T.1.2.3 Self-indicating instrument

Instrument in which the position of equilibrium is obtained without the intervention of an operator.

T.1.2.4 Semi-self-indicating instrument

Instrument with a self-indication weighing range, in which the operator intervenes to alter the limits of this range.

T.1.2.5 Non-self-indicating instrument

Instrument in which the position of equilibrium is obtained entirely by the operator.

T.1.2.6 Electronic instrument

Instrument equipped with electronic devices.

T.1.2.7 Instrument with price scales

Instrument that indicates the price to pay by means of price charts or scales related to a range of unit prices.

T.1.2.8 Price-computing instrument

Instrument that calculates the price to pay on the basis of the indicated mass and the unit price.

T.1.2.9 Price-labeling instrument

Price-computing instrument that prints the weight value, unit price and price to pay for prepackages.

T.1.2.10 Self-service instrument

Instrument that is intended to be operated by the customer.

T.1.3 Indications provided by an instrument

T.1.3.1 Primary indications

Indications, signals and symbols that are subject to requirements of this Recommendation.

T.1.3.2 Secondary indications

Indications, signals and symbols that are not primary indications.

T.2 Construction of an instrument

In this Recommendation the term "device" is used for any means by which a specific function is performed, irrespective of the physical realization, e.g. by a mechanism or a key initiating an operation; the device may be a small part or a major portion of an instrument.

T.2.1.1 Load receptor

Part of the instrument intended to receive the load.

T.2.1.2 Load-transmitting device

Part of the instrument for transmitting the force produced by the load acting on the load receptor, to the load-measuring device.

T.2.1.3 Load-measuring device

Part of the instrument for measuring the mass of the load by means of an equilibrium device for balancing the force coming from the load transmitting device, and an indicating or printing device.

T.2.2 Module

Part of an instrument which performs a specific function, can be examined separately and is subject to specified partial error limits.

T.2.3 Electronic parts

T.2.3.1 Electronic device

A device employing electronic sub-assemblies and performing a specific function. An electronic device is usually manufactured as a separate unit and can be independently tested.

Note: An electronic device, as defined above, may be a complete instrument

(e.g. instrument for direct sales to the public) or part of an instrument(e.g. printer, indicator).

T.2.3.2 Electronic sub-assembly

A part of an electronic device, employing electronic components and having a recognizable function of its own.

Examples: A/D converter, display matrix,…

T.2.3.3 Electronic component

The smallest physical entity that uses electron or hole conduction in semiconductors, gases or in a vacuum.

T.2.4 Indicating device (of a weighing instrument)

Part of the load measuring device on which the direct reading of the result is obtained.

T.2.4.1 Indicating component

Component indicating the equilibrium and/or the result.

On an instrument with one position of equilibrium it indicates only the equilibrium (so-called zero).

On an instrument with several positions of equilibrium it indicates both the equilibrium and the result. On an electronic instrument, this is the display.

T.2.4.2 Scale mark

A line or other mark on an indicating component corresponding to a specified value of mass.

T.2.4.3 Scale base

An imaginary line through the centres of all the shortest scale marks.

T.2.5 Auxiliary indicating devices

T.2.5.1 Rider

Detachable poise of small mass that may be placed and moved either on a graduated bar integral with the beam or on the beam itself.

T.2.5.2 Device for interpolation of reading (vernier or nonius)

Device connected to the indicating element and sub-dividing the scale of an in strument, without special adjustment.

T.2.5.3 Complementary indicating device

Adjustable device by means of which it is possible to estimate, in units of mass, the value corresponding to the distance between a scale mark and the indicating component.

T.2.5.4 Indicating device with a differentiated scale division

Digital indicating device of which the last figure after the decimal sign is clearly differentiated from other figures.

T.2.6 Extended indicating device

A device temporarily changing the actual scale interval (d) to a value less than the verification scale interval (e) following a manual command.

T.2.7 Supplementary devices

T.2.7.1 Levelling device

Device for setting an instrument to its reference position.

T.2.7.2 Zero-setting device

Device for setting the indication to zero when there is no load on the load receptor.

T.2.7.2.1 Non-automatic zero-setting device

Device for setting the indication to zero by an operator.

T.2.7.2.2 Semi-automatic zero-setting device

Device for setting the indication to zero automatically following a manual command.

T.2.7.2.3 Automatic zero-setting device

Device for setting the indication to zero automatically without the intervention of an operator.

T.2.7.2.4 Initial zero-setting device

Device for setting the indication to zero automatically at the time the instrument is switched on and before it is ready for use.

T.2.7.3 Zero-tracking device

Device for maintaining the zero indication within certain limits automatically.

T.2.7.4 Tare device

Device for setting the indication to zero when a load is on the load receptor:

– without altering the weighing range for net loads (additive tare device), or

– reducing the weighing range for net loads (subtractive tare device).

It may function as:

– a non-automatic device (load balanced by an operator),

– a semi-automatic device (load balanced automatically following a single manual command),

– an automatic device (load balanced automatically without the intervention of an operator).

T.2.7.4.1 Tare-balancing device

Tare device without indication of the tare value when the instrument is loaded.

T.2.7.4.2 Tare-weighing device

T.2.7.5 Preset tare device

Tare device that stores the tare value and is capable of indicating or printing it whether or not the instrument is loaded.

Device for subtracting a preset tare value from a gross or net weight value and indicating the result of the calculation. The weighing range for net loads is reduced accordingly.

T.2.7.6 Locking device for immobilizing all or part of the mechanism of an instrument.

T.2.7.7 Auxiliary verification device

Device permitting separate verification of one or more main devices of an instrument.

T.2.7.8 Selection device for load receptors and load-measuring devices

Device for attaching one or more load receptors to one or more load measuring devices, whatever intermediate load-transmitting devices are used.

T.2.7.9 Indication stabilizing device for maintaining a stable indication under given conditions.

T.3.1.5 Extension interval of self-indication

T.3 Metrological characteristics of an instrument

T.3.1 Weighing capacity

T.3.1.1 Maximum capacity (Max)

Maximum weighing capacity, not taking into account the additive tare capacity.

T.3.1.2 Minimum capacity (Min)

Value of the load below which the weighing results may be subject to an excessive relative error.

T.3.1.3 Self-indication capacity

Weighing capacity within which equilibrium is obtained without the intervention of an operator.

T.3.1.4 Weighing range

Range between the minimum and maximum capacities.

Value by which it is possible to extend the range of self-indication within the weighing range.

T.3.1.6 Maximum tare effect (T = + …, T = – …) Maximum capacity of the additive tare device or the subtractive tare device.

T.3.1.7 Maximum safe load (Lim)

Maximum static load that can be carried by the instrument without permanently altering its metrological qualities.

T.3.2 Scale divisions

T.3.2.1 Scale spacing (instrument with analogue indication)

Distance between any two consecutive scale marks, measured along the scale base.

T.3.2.2 Actual scale interval (d) Value expressed in units of mass of:

– the difference between the values corresponding to two consecutive scale marks, for analogue indication, or

– the difference between two consecutive indicated values, for digital indication.

T.3.2.3 Verification scale interval (e)

Value, expressed in units of mass, used for the classification and verification of an instrument.

T.3.2.4 Scale interval of numbering

Value of the difference between two consecutive numbered scale marks.

T.3.2.5 Number of verification scale intervals (single-interval instrument)

Quotient of the maximum capacity and the verification scale interval: n = Max/e

T.3.2.6 Multi-interval instrument

Instrument having one weighing range which is divided into partial weighing ranges each with different scale intervals, with the weighing range determined automatically according to the load applied, both on increasing and decreasing loads.

T.3.2.7 Multiple range instrument

Instrument having two or more weighing ranges with different maximum capacities and different scale intervals for the same load receptor, each range extending from zero to its maximum capacity.

T.3.3 Reduction ratio R

The reduction ratio of a load transmitting device is:

$$R = FM/FL$$

where:

FM: force acting on the load measuring device,
FL: force acting on the load receptor.

T.4 Metrological properties of an instrument

T.4.1 Sensitivity

For a given value of the measured mass, the quotient of the change of the observed variable ℓ and the corresponding change of the measured mass M:

$k = \Delta \ell / \Delta M$

T.4.2 Discrimination

Ability of an instrument to react to small variations of load.

The discrimination threshold, for a given load, is the value of the smallest additional load that, when gently deposited on or removed from the load receptor, causes a perceptible change in the indication.

T.4.3 Repeatability

Ability of an instrument to provide results that agree one with the other when the same load is deposited several times and in a practically identical way on the load receptor under reasonably constant test conditions.

T.4.4 Durability

Ability of an instrument to maintain its performance characteristics over a period of use.

T.4.5 Warm-up time

The time between the moment power is applied to an instrument and the moment at which the instrument is capable of complying with the requirements.

T.5 Indications and errors

T.5.1 Methods of indication

T.5.1.1 Balancing by weights

Value of metrologically controlled weights that balance the load (taking into account the reduction ratio of the load).

T.5.1.2 Analogue indication

Indication enabling the evaluation of the equilibrium position to a fraction of the scale interval.

T.5.1.3 Digital indication

Indication in which the scale marks are composed of a sequence of aligned figures that do not permit interpolation to fractions of the scale interval.

T.5.2 Weighing results

Note: The following definitions apply only when the indication has been zero before the load has been applied to the instrument.

T.5.2.1 Gross value (G or B)

Indication of the weight of a load on an instrument, with no tare or preset tare device in operation.

T.5.2.2 Net value (N)

Indication of the weight of a load placed on an instrument after operation of a tare device.

T.5.2.3 Tare value (T)

The weight value of a load, determined by a tare weighing device.

T.5.3 Other weight values

T.5.3.1 Preset tare value (PT)

Numerical value, representing a weight, that is introduced into the instrument.

"Introduced" includes procedures such as: keying in, recalling from a data storage, or inserting via an

interface.

T.5.3.2 Calculated net value

Value of the difference between a gross or net weight value and a preset tare value.

T.5.3.3 Calculated total weight value

Calculated sum of more than one weight value and/or calculated net value.

T.5.4 Reading

T.5.4.1 Reading by simple juxtaposition

Reading of the weighing result by simple juxtaposition of consecutive figures giving the weighing result, without the need of calculation.

T.5.4.2 Overall inaccuracy of reading

The overall inaccuracy of reading of an instrument with analogue indication is equal to the standard deviation of the same indication, the reading of which is carried out under normal conditions of use by several observers.

It is customary to make at least ten readings of the result.

T.5.4.3 Rounding error of digital indication

Difference between the indication and the result the instrument would give with analogue indication.

T.5.4.4 Minimum reading distance

The shortest distance that an observer is able freely to approach the indicating device to take a reading under normal conditions of use.

This approach is considered to be free for the observer if there is a clear space of at least 0.8 m in front of the indicating device (see Figure 1).

Figure 1

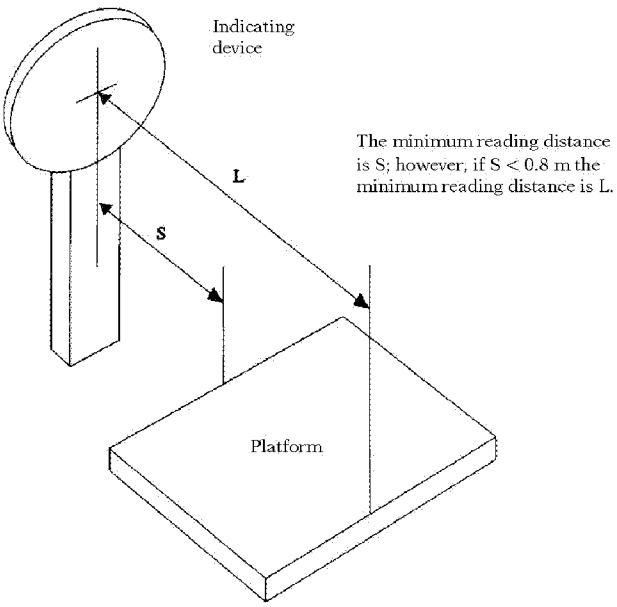

T.5.5 Errors (See Figure 2 for illustration of certain terms used)

T.5.5.1 Error (of indication)

The indication of an instrument minus the (conventional) true value of the mass.

T.5.5.2 Intrinsic error

The error of an instrument under reference conditions.

T.5.5.3 Initial intrinsic error

The intrinsic error of an instrument as determined prior to the performance and span stability tests.

T.5.5.4 Maximum permissible error

Maximum difference, positive or negative, allowed by regulation between the indication of an instrument and the corresponding true value, as determined by reference standard masses, with the instrument being at zero at no-load, in the reference position.

T.5.5.5 Fault

The difference between the error of indication and the intrinsic error of an instrument.

Note: Principally, a fault is the result of an undesired change of data contained in or flowing through an electronic instrument.

T.5.5.6 Significant fault

A fault greater than e.

Note: For a multi-interval instrument, the value of e is that appropriate to the partial weighing range.

The following are not considered to be significant faults, even when they exceed e:

- faults arising from simultaneous and mutually independent causes in the instrument,
- faults implying the impossibility to perform any measurement,
- faults being so serious that they are bound to be noticed by all those interested in the result of measurement,
- transitory faults being momentary variations in the indication which cannot be interpreted, memorized or transmitted as a measuring result.

T.5.5.7 Durability error

The difference between the intrinsic error over a period of use and the initial intrinsic error of an instrument.

T.5.5.8 Significant durability error

A durability error greater than e.

Note 1: A durability error can be due to mechanical wear and tear or due to drift and ageing of electronic parts. The concept of significant dur ability error applies only to electronic parts.

Note 2: For a multi-interval instrument, the value of e is that appropriate to the partial weighing range.

The following are not considered to be significant durability errors, even when

they exceed e: errors occuring after a period of instrument use that are clearly the result of a failure of a device/component, or of a disturbance and for which the indication:

- cannot be interpreted, memorized, or transmitted as a measurement result, or
- implies the impossibility to perform any measurement, or
- is so obviously wrong that it is bound to be noticed by all those interested in the result of measurement.

T.5.5.9 Span stability

The capability of an instrument to maintain the difference between the indication of weight at maximum capacity and the indication at zero over a period of use within specified limits.

T.6 Influences and reference conditions

T.6.1 Influence quantity

A quantity that is not the subject of the measurement but which influences the values of the measurand or the indication of the instrument.

T.6.1.1 Influence factor

An influence quantity having a value within the specified rated operating conditions of the instrument.

T.6.1.2 Disturbance

An influence quantity having a value within the limits specified in this Recommendation, but outside the specified rated operating conditions of the instrument.

T.6.2 Rated operating conditions

Conditions of use, giving the range of values of influence quantities for which the metrological characteristics are intended to lie within the specified maximum permissible errors.

T.6.3 Reference conditions

A set of specified values of influence factors fixed to ensure valid inter-comparison of the results of measurements.

T.6.4 Reference position

Position of the instrument at which its operation is adjusted.

T.7 Performance test

A test to verify whether the equipment under test (EUT) is capable of performing its intended functions.

Figure 2 Illustration of certain terms used

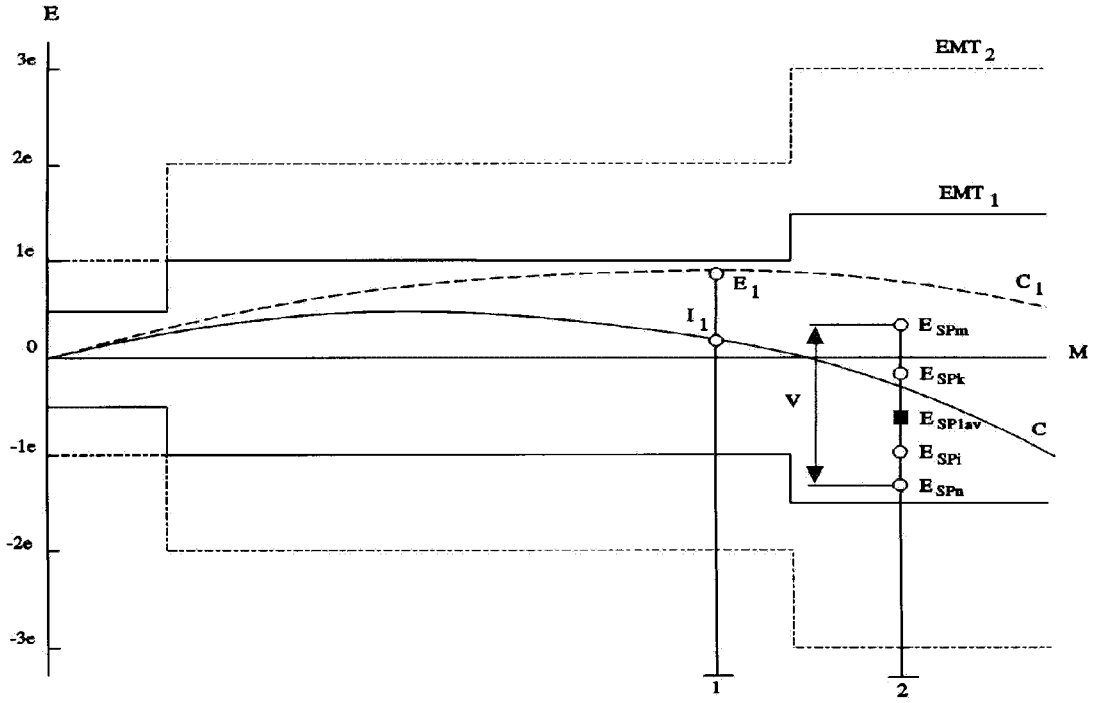

M = mass to be measured

E = error of indication (T.5.5.1)

MPE_1 = maximum permissible error on initial verification

MPE_2 = maximum permissible error in service

C= characteristic under reference conditions

C1= characteristic due to influence factor or disturbance (*)

ESP= error of indication evaluated during span stability test

I= intrinsic error (T.5.5.2)

V= variation in the errors of indication during span stability test

Situation 1 – shows the error E_1 of an instrument due to an influence factor or a disturbance. I_1 is the intrinsic error. The fault (T.5.5.5) due to the influence factor or disturbance applied equals $E_1 - I_1$.

Situation 2 – shows the average value E_{SP1av} of the errors at the first measurement of the span stability test, some other errors E_{SPi} and E_{SPk}, and the extreme values of the errors, and E_{SPn}, all these errors being evaluated at different moments during the span E_{SPm} stability test. The variation V in the errors of indication during the span stability test equals $E_{SPm} - E_{SPn}$.

1. Scope

This Recommendation specifies the metrological and technical requirements for nonautomatic weighing instruments that are subject to official metrological control.

It is intended to provide standardized requirements and testing procedures to evaluate the metrological and technical characteristics in a uniform and traceable way.

2 . Principles of the Recommendation

2.1 Units of measurement

The units of mass to be used on an instrument are the kilogram (kg), the milligram (mg), the gram (g), and the ton (t).

For special applications, e.g. trade with precious stones, the metric carat (1 carat = 0.2 g) may be used as unit of measurement.A symbol for the carat shall be ct.

2.2 Principles of the metrological requirements

The requirements apply to all instruments irrespective of their principles of measurement.

Instruments are classified according to:

– the verification scale interval, representing absolute accuracy, and

– the number of verification scale intervals, representing relative accuracy.

The maximum permissible errors are in the order of magnitude of the verification scale interval.

A minimum capacity (Min) is specified to indicate that use of the instrument with light loads is likely to give rise to excessive relative errors.

2.3 Principles of the technical requirements

General technical requirements apply to all types of instruments, whether mechanical or electronic, and are completed or modified with additional requirements for instruments used for specific applications or designed for a special technology. They are intended to specify the performance, not the design of an instrument, so that technical progress is not impeded.

In particular, functions of electronic instruments not covered by this Recommendation should be allowed provided that they do not interfere with the metrological requirements.

Testing procedures are provided to establish conformity of instruments with the requirements of this Recommendation. They should be applied, and the test report should be used, to facilitate exchange and acceptance of test results by metrological authorities.

2.4 Application of requirements

The requirements of this Recommendation apply to all devices performing the relevant functions, whether they are incorporated in an instrument or manufactured as separate units.

Examples are: load-measuring device ,
indicating device,
printing device,
preset tare device,
price-calculating device.

However, devices that are not incorporated in the instrument may, by national legislation, be exempted from the requirements for special applications.

2.5 Terminology

The terminology given in pages 5 to 17 shall be considered as a part of this Recommendation.

3 . Metrological requirements

3.1 Principles of classification

3.1.1 Accuracy classes

The accuracy classes for instruments and their symbols (*) are given in Table 1.

Table 1

special accuracy	I
high accuracy	II
medium accuracy	III
ordinary accuracy	IIII

(*) Ovals of any shape, or two horizontal lines joined by two half-circles are permitted. A circle shall not be used.

3.1.2 Verification scale interval

The verification scale interval for different types of instruments is given in Table 2.

Table 2

Type of instrument	Verification scale interval
Graduated, without auxiliary indicating device	e = d
Graduated, with auxiliary indicating device	e is chosen by the manufacturer according to requirements in 3.2 and 3.4.2
Non-graduated	e is chosen by the manufacturer according to requirements in 3.2

3.2 Classification of instruments

The verification scale interval, number of verification scale intervals and the minimum capacity, in relation to the accuracy class of an instrument, are given in Table 3.

Table 3

Accuracy class	Verification scale interval e	Number of verification scale intervals n = Max/e		Minimum capacity Min (Lower limit)
		minimum	maximum	
Special (I)	0.001 g ≤ e (*)	50 000 (**)	–	100 e
High (II)	0.001 g ≤ e ≤ 0.05 g	100	100 000	20 e
	0.1 g ≤ e	5 000	100 000	50 e
Medium (III)	0.1 g ≤ e ≤ 2 g	100	10 000	20 e
	5 g ≤ e	500	10 000	20 e
Ordinary (IIII)	5 g ≤ e	100	1 000	10 e

(*) It is not normally feasible to test and verify an instrument to e < 1 mg, due to the uncertainty of the test loads.

(**) See exception in 3.4.4.

On multiple range instruments the verification scale intervals are e_1, e_2, …, e_r with $e_1 < e_2 < \ldots < e_r$. Min, n and Max are indexed accordingly.

On multiple range instruments, each range is treated basically as an instrument with one range.

For special application that are clearly marked on the instrument, an instrument may have weighing ranges in classes (I) and (II) or in classes (II) and (III). The instrument as a whole shall then comply with the more severe requirements of 3.9 applicable to either of the two classes.

3.3 Additional requirements for a multi-interval instrument (*)

3.3.1 Partial weighing range Each partial range (index i = 1, 2 ⋯) is defined by:

– its verification scale interval e_i, $e_{i+1} > e_i$,

– its maximum capacity Max_i,

– its minimum capacity $Min_i = Max_{i-1}$ (for i = 1 the minimum capacity is Min_1 = Min).

The number of verification scale intervals n_i for each partial range is equal to:

$n_i = Max_i/e_i$

(*) Example for a multi-interval instrument:

Maximum capacity Max = 15 kg class (III)

Verification scale intervals e_1 = 1 g from 0 to 2 kg

e_2= 2 g from 2 kg to 5 kg

e_3= 10 g from 5 kg to 15 kg

This instrument has one Max and one weighing range from Min = 20 g to Max = 15 kg. The partial weighing ranges are:

Min = 20 g, Max_1= 2 kg, e_1= 1 g, n_1= 2 000

Min_2 = 2 kg, Max_2= 5 kg, e_2= 2 g, n_2= 2 500

Min_3 = 5 kg, Max_3= Max = 15 kg, e_3= 10 g, n_3= 1 500

The maximum permissible errors on initial verification (mpe) (see 3.5.1) are:

for m = 400 g = 400e_1 mpe = 0.5 g

for m = 1 600 g = 1 600e_1 mpe = 1.0 g

for m = 2 100 g = 1 050e_2 mpe = 2.0 g

for m = 4 250 g = 2 125e_2 mpe = 3.0 g

for m = 5 100 g = 510e_3 mpe = 10.0 g

for m = 15 000 g = 1 500e_3 mpe = 10.0 g

Whenever the variation of the indication due to certain influence factors is limited to a fraction or multiple of e, this means, in a multi-interval instrument, that e is to be taken according to the load applied; in particular, at or near zero load e = e_1.

3.3.2 Accuracy class

e_i and n_i in each partial weighing range, and Min_1 shall comply with the requirements given in Table 3 according to the accuracy class of the instrument.

3.3.3 Maximum capacity of partial weighing ranges With the exception of the last partial weighing range, the requirements in Table 4 shall be complied with, according to the accuracy class of the instrument.

Table 4

Class	(I)	(II)	(III)	(IIII)
Max_i/e_{i+1}	≥ 50 000	≥ 5 000	≥ 500	≥ 50

3.3.4 Instrument with a tare device

Requirements concerning the ranges of a multi-interval instrument apply to the net load, for every possible value of the tare.

3.4 Auxiliary indicating devices

3.4.1 Type and application

Only instruments of classes (I) and (II) may be fitted with an auxiliary indicating device, which shall be:

– a device with a rider, or

– a device for interpolation of reading, or

– a complementary indicating device (*), or

– an indicating device with a differentiated scale division (**). These devices are permitted only to the right of the decimal sign. A multi-interval instrument shall not be fitted with an auxiliary indicating device.

3.4.2 Verification scale interval

The verification scale interval e is determined by the expression:

$d < e \leqq 10\,d$ (***)

$e = 10^k$ kg

k being a positive or negative whole number, or zero.

This requirement does not apply to an instrument of class (I) with d < 1 mg, where e = 1 mg.

(*) Figure 3: example of a complementary indicating device

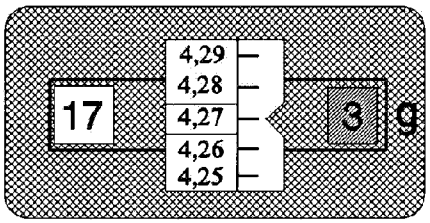

indication: 174.273 g

last figure: 3

d = 1 mg e = 10 mg

(**) Figure 4: examples of indicating devices each with a differentiated scale division

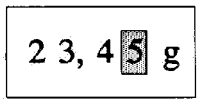

last differentiated figure: 5
d = 0.01 g or 0.05 g
e = 0.1 g

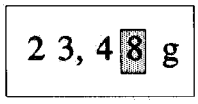

last differentiated figure: 8
d = 0.01 g or 0.02 g
e = 0.1 g

(***) The values of e, calculated following this rule, are, for example:

Table 5

d =	0.1 g	0.2 g	0.5 g
e =	1 g	1 g	1 g

3.4.3 Minimum capacity

The minimum capacity of the instrument is determined in conformity with the requirements in Table 3. However, in the last column of this Table, the verification scale interval e is replaced by the actual scale interval d.

3.4.4 Minimum number of verification scale intervals

For an instrument of class (I) with d < 0.1 mg, n may be less than 50 000.

3.5 Maximum permissible errors (*)

(*) An example of application to multi-interval instruments is given in the footnote to 3.3.

3.5.1 Values of maximum permissible errors on initial verification

The maximum permissible errors for increasing or decreasing loads are given in Table 6.

Table 6

Maximum permissible errors on initial verification	for loads m expressed in verification scale intervals e			
	class (I)	class (II)	class (III)	class (IIII)
± 0.5 e	0 ≤ m ≤ 50 000	0 ≤ m ≤ 5 000	0 ≤ m ≤ 500	0 ≤ m ≤ 50
± 1 e	50 000 < m ≤ 200 000	5 000 < m ≤ 20 000	500 < m ≤ 2 000	50 < m ≤ 200
± 1.5 e	200 000 < m	20 000 < m ≤ 100 000	2 000 < m ≤ 10 000	200 < m ≤ 1 000

3.5.2 Values of maximum permissible errors in service

The maximum permissible errors in service shall be twice the maximum permissible errors on initial verification.

3.5.3 Basic rules concerning the determination of errors

3.5.3.1 Influence factors

Errors shall be determined under normal test conditions. When the effect of one factor is being evaluated, all other factors are to be kept relatively constant, at a value close to normal.

3.5.3.2 Elimination of rounding error

The rounding error included in any digital indication shall be eliminated if the actual scale interval is greater than 0.2 e.

3.5.3.3 Maximum permissible errors for net values

The maximum permissible errors apply to the net value for every possible tare load, except preset tare values.

3.5.3.4 Tare weighing device

The maximum permissible errors for a tare weighing device are the same, for any tare value, as those of the instrument, for the same value of load.

3.5.4 Apportioning of errors

Where modules are examined separately in the process of type approval, the following requirements apply.

3.5.4.1 The error limits applicable to a module M_i which is examined separately are equal to a fraction p_i of the maximum permissible errors or the allowed variations of the indication of the complete instrument. The fractions for any module have to be taken for the same accuracy class and the same number of verification scale intervals, as for the complete instrument incorporating the module.

The fractions p_i shall satisfy the following equation:

$$p_1^2 + p_2^2 + p_3^2 + \ldots \leqq 1$$

3.5.4.2 The fraction p_i shall be chosen by the manufacturer of the module and shall be verified by an appropriate test. However, the fraction shall not exceed 0.8 and shall not be less than 0.3, when more than one module contribute to the effect in question.

Acceptable solution (see 2nd paragraph of clause 4)

For mechanical structures such as weighbridges, load transmitting devices and mechanical or electrical connecting elements evidently designed and manufactured according to sound engineering practice, an overall fraction $p_i = 0.5$ may be applied without any test, e.g. when levers are made of the same material and when the chain of levers has two planes of symmetry (longitudinal and transversal), or when the stability characteristics of electrical connecting elements are appropriate for the signals transmitted, such as load cell output, impedance,…

For instruments incorporating the typical modules (see acceptable solution in 8.2.1) the fractions p_i may have the values given in Table 7.

Table 7

Performance criteria	Load cell	Electronic indicator	Connecting elements, etc.
Combined effect (*)	0.7	0.5	0.5
Temperature effect on no load indication	0.7	0.5	0.5
Power supply variation	–	1	–
Effect of creep	1	–	–
Damp heat	0.7	0.5	0.5
(*) Combined effects: non-linearity, hysteresis, temperature effect on span. After the warm-up time specified by the manufacturer, the combined effect error fractions apply to modules. The sign "–" means "not applicable".			

3.5.5 Testing for verification

Where a load measuring device is tested separately for verification, the maximum permissible error is equal to 0.7 times the maximum permissible error for the complete instrument (this fraction includes the errors attributable to the verification devices used).

In any case the instrument submitted for verification shall be tested as a whole.

3.6 Permissible differences between results

Regardless of what variation of results is permitted, the error of any single weighing result shall by itself not exceed the maximum permissible error for the given load.

3.6.1 Repeatability

The difference between the results of several weighings of the same load shall not be greater than the absolute value of the maximum permissible error of the instrument for that load.

3.6.2 Eccentric loading

The indications for different positions of a load shall meet the maximum permissible errors, when the instrument is tested according to 3.6.2.1 through 3.6.2.4.

Note: If an instrument is designed in such a way that loads may be applied in different manners, it may be appropriate to apply more than one of the following tests.

3.6.2.1 Unless otherwise specified hereafter, a load corresponding to 1/3 of the sum of the maximum capacity and the corresponding maximum additive tare effect shall be applied.

3.6.2.2 On an instrument with a load receptor having n points of support, with $n > 4$, the fraction $1/(n-1)$ of the sum of the maximum capacity and the maximum additive tare effect shall be applied to each point of support.

3.6.2.3 On an instrument with a load receptor subject to minimal off-centre loading (e.g. tank, hopper,…) a test load corresponding to one-tenth of the sum of the maximum capacity and the maximum additive tare effect shall be applied to each point of support.

3.6.2.4 On an instrument used for weighing rolling loads (e.g. vehicle scale, rail suspension instrument) a rolling test load corresponding to the usual rolling load, the heaviest and the most concentrated one which may be weighed, but not exceeding 0.8 times the sum of the maximum capacity and the maximum additive tare effect, shall be applied at different points on the load receptor.

3.6.3 Multiple indicating devices

For a given load the difference between the indications of multiple indicating devices including tare weighing devices, shall be not greater than the absolute value of the maximum permissible error, but shall be zero between digital indicating or printing devices.

3.6.4 Different positions of equilibrium

The difference between two results obtained for the same load when the method of balancing the load is changed (in the case of an instrument fitted with a device for extending the self-indication capacity) in two consecutive tests, shall not exceed the absolute value of the maximum permissible error for the applied load.

3.7 Verification standards

3.7.1 Weights

The standard weights or standard masses used for the verification of an instrument shall not have an error greater than 1/3 of the maximum permissible error of the instrument for the applied load.

3.7.2 Auxiliary verification device

When an instrument is fitted with an auxiliary verification device, or when it is verified with a separate auxiliary device, the maximum permissible errors of this device shall be 1/3 of the maximum permissible errors for the applied load. If weights are used, the effect of their errors shall not exceed 1/5 of the maximum permissible errors of the instrument to be verified for the same load.

3.7.3 Substitution of standard weights

When testing instruments with Max > 1 t, instead of standard weights any other constant load may be used, provided that standard weights of at least 1 t or 50 % of Max, whichever is greater, are used. Instead of 50 % of Max, the portion of standard weights may be reduced to:

35 % of Max if the repeatability error is not greater than 0.3 e,

20 % of Max if the repeatability error is not greater than 0.2 e.

The repeatability error has to be determined with a load of about 50 % of Max which is placed 3 times on the load receptor.

3.8 Discrimination

3.8.1 Non-self-indicating instrument

An extra load equivalent to 0.4 times the absolute value of the maximum permissible error for the applied load when gently placed on or withdrawn from the instrument at equilibrium shall produce a visible movement of the indicating element.

3.8.2 Self- or semi-self-indicating instrument

3.8.2.1 Analogue indication

An extra load equivalent to the absolute value of the maximum permissible error for the applied load when gently placed on or withdrawn from the instrument at equilibrium shall cause a permanent displacement of the indicating element corresponding to not less than 0.7 times the extra load.

3.8.2.2 Digital indication

An additional load equal to 1.4 times the actual scale interval, when gently placed on or withdrawn from the instrument at equilibrium shall change the initial indication.

3.9 Variations due to influence quantities and time

An instrument shall comply, unless otherwise specified, with 3.5, 3.6 and 3.8 under the conditions of 3.9.2 and 3.9.3 and additionally it shall comply with 3.9.1 and 3.9.4.

3.9.1 Tilting

3.9.1.1 For an instrument of class (II), (III) or (IIII) liable to be tilted, the influence of tilting shall be determined under the effect of a lengthwise or transverse tilting equal to 2/1000 or corresponding to the limiting value of tilting marked on, or indicated by a level indicator, whichever is the greater tilt.

The absolute value of the difference between the indication of the instrument in its reference position (not tilted) and the indication in the tilted position shall not exceed:

– at no load, two verification scale intervals (the instrument having first been adjusted to zero at no load in its reference position) except instruments of class (II) (how-ever see 4.14.8),

– at self indication capacity and at maximum capacity, the maximum permissible error (the instrument having been adjusted to zero at no load both in the reference and in the tilted position).

An instrument shall be fitted with a leveling device and a level indicator fixed firmly on the instrument in a place clearly visible to the user, unless the instrument is:

– freely suspended, or

– installed in a fixed position, or

– complying with the requirements on tilting when tilted to 5 % in any direction.

The limiting value of the level indicator shall be obvious, so that tilting is easily noticed.

Note: "Limiting value of tilting": displacement of 2 mm from a central position (regardless of the diameter of any ring used to indicate the center), lamp, or any other indication of the level indicator which shows that the maximum permissible tilt is being exceeded.

3.9.1.2 On a class (I) instrument, the limiting value of tilting shall correspond to a tilt of no more than 2/1000 otherwise the instrument shall meet the requirements for instruments of class (II).

3.9.2 Temperature (*)

(*) Tolerances for the temperature values are given in the testing procedures, Annexes A and B.

3.9.2.1 Prescribed temperature limits

If no particular working temperature is stated in the descriptive markings of an instrument, this instrument shall maintain its metrological properties within the following temperature limits:

– 10 °C, + 40 °C

3.9.2.2 Special temperature limits

An instrument for which particular limits of working temperature are stated in the descriptive markings shall comply with the metrological requirements within those limits.

The limits may be chosen according to the application of the instrument.

The ranges within those limits shall be at least equal to:

5 °C for instruments of class (I),

15 °C for instruments of class (II),

30 °C for instruments of classes (III) and (IIII).

3.9.2.3 Temperature effect on no-load indication

The indication at zero or near zero shall not vary by more than one verification scale interval for a difference in ambient temperature of 1 °C for instruments of (I) class and 5 °C for other classes.

For multi-interval instruments and for multiple range instruments this applies to the smallest verification scale interval of the instrument.

3.9.3 Mains power supply

An instrument operated from a mains power supply shall comply with the metrological requirements if the power supply varies:

– in voltage from – 15 % to + 10 % of the value marked on the instrument,

– in frequency from – 2 % to + 2 % of the value marked on the instrument, if AC is used.

3.9.4 Time

Under reasonably constant environmental conditions, an instrument of class (II), (III) or (IIII) shall meet the following requirements.

3.9.4.1 When any load is kept on an instrument, the difference between the indication obtained immediately after placing a load and the indication observed during the following 30 minutes, shall not exceed 0.5 e. However, the difference between the indication obtained at 15 minutes and that at 30 minutes shall not exceed 0.2 e.

If these conditions are not met, the difference between the indication obtained immediately after placing a load on the instrument and the indication observed during the following four hours shall not exceed the absolute value of the maximum permissible error at the load applied.

3.9.4.2 The deviation on returning to zero as soon as the indication has stabilized, after the removal of any load which has remained on the instrument for one half hour, shall not exceed 0.5 e.

For a multi-interval instrument, the deviation shall not exceed 0.5 e_1.

On a multiple range instrument, the deviation on returning to zero from Max_i shall not exceed 0.5 e_i. Furthermore, after returning to zero from any load greater than Max_1 and immediately after switching to the lowest weighing range, the indication near zero shall not vary by more than e_1 during the following 5 minutes.

3.9.4.3 The durability error due to wear and tear shall not be greater than the absolute value of the maximum permissible error.

Adherence to this requirement is assumed if the instrument has passed the endurance test specified in A.6, which shall be performed only for instruments with Max ≦ 100 kg.

3.9.5 Other influence quantities and restraints

Where other influences and restraints, such as:

– vibrations,

– precipitations and draughts,

– mechanical constraints and restrictions,

are a normal feature of the intended operating environment of the instrument, the instrument shall comply with the requirements of clauses 3 and 4 under those influences and restraints, either by being designed to operate correctly in spite of these influences, or by being protected against their action.

Example: Instruments installed outdoors without suitable protection against atmospheric conditions may normally not comply with the requirements of clauses 3 and 4 if the number of verification scale intervals n is too great. (A value of n = 3 000 should not be exceeded. Furthermore for road or rail weighbridges the verification scale interval should not be less than 10 kg).

This limit should also apply to each weighing range of combinations of instruments or of multiple range instruments or to each partial weighing range of multi-interval instruments.

3.10 Pattern evaluation tests

Upon pattern evaluation, the tests given in Annexes A and B shall be performed, to verify adherence to the requirements in 3.5, 3.6, 3.8, 3.9.1, 3.9.2, 3.9.3, 3.9.4, 4.5, 4.6,

5.3 and 6.1. The endurance test (A.6) shall be performed after all other tests in Annexes A and B.

Peripheral devices that only perform digital functions, e.g. printers or additional displays, only need to be tested for correct functioning and submitted to the disturbance tests in B.3.

4. Technical requirements for a self- or semi-self-indicating instrument

The following requirements relate to the design and the construction of instruments which are suitable to give correct and unambiguous weighing results, under normal conditions of use and proper handling by unskilled users. They are not intended to prescribe solutions, but to define appropriate functioning of the instrument.

Certain solutions that have been tried over a long period have become accepted; these solutions are marked "acceptable solution"; while it is not necessary to adopt them, they are considered to comply with the requirements of the applicable provision.

4.1 General requirements of construction

4.1.1 Suitability

4.1.1.1 Suitability for application

An instrument shall be designed to suit its intended purpose of use.

4.1.1.2 Suitability for use

An instrument shall be solidly and carefully constructed in order to ensure that it maintains its metrological qualities during a period of use.

4.1.1.3 Suitability for verification

An instrument shall permit the tests set out in this Recommendation to be performed.

In particular, load receptors shall be such that the standard masses can be deposited on them easily and in total safety. If weights cannot be placed, an additional support may be required.

It must be possible to identify devices that have been subject to a separate type examination procedure (e.g. load cells, printers,…).

4.1.2 Security

4.1.2.1 Fraudulent use

An instrument shall have no characteristics likely to facilitate its fraudulent use.

4.1.2.2 Accidental breakdown and maladjustment

An instrument shall be so constructed that an accidental breakdown or a maladjustment of control elements likely to disturb its correct functioning cannot take place without its effect being evident.

4.1.2.3 Controls

Controls shall be so designed that they cannot normally come to rest in positions other than those intended by design, unless during the maneuver all indication is made impossible. Keys shall be marked unambiguously.

4.1.2.4 Securing (sealing) of components and pre-set controls

Means shall be provided for securing components and pre-set controls to which access or adjustment is prohibited. National legislation may specify the sealing that is required.

On a class (I) instrument, devices to adjust sensitivity may remain unsecured.

Acceptable solution

For application of the control marks, the sealing area should have a diameter of at least 5 mm.

Components and pre-set controls may be secured by passwords or similar software means provided that any access to the secured controls or functions becomes automatically evident, e.g. by automatically updating a code number the value of which at the time of the last verified set-up had been durably marked on the data plate.

4.1.2.5 Adjustment

An instrument may be fitted with an automatic or a semi-automatic span adjustment device. This device shall be incorporated inside the instrument. External influence upon this device shall be practically impossible after sealing.

4.1.2.6 Gravity compensation

A gravity sensitive instrument may be equipped with a device for compensating the effects of gravity variations. After securing, external influence on or access to this device shall be practically impossible.

4.2 Indication of weighing results

4.2.1 Quality of reading

Reading of the results shall be reliable, easy and unambiguous under conditions of normal use:

– the overall inaccuracy of reading of an analogue indicating device shall not exceed 0.2 e,

– the figures forming the results shall be of a size, shape and clarity for reading to be easy.

The scales, numbering and printing shall permit the figures which form the results to be read by simple juxtaposition.

4.2.2 Form of the indication

4.2.2.1 Weighing results shall contain the names or symbols of the units of mass in which they are expressed.

For any one indication of weight, only one unit of mass may be used.

The scale interval shall be in the form 1×10^k, 2×10^k or 5×10^k units in which the result is expressed, the index k being a positive or negative whole number or equal to zero.

All indicating, printing and tare weighing devices of an instrument shall, within any one weighing range, have the same scale interval for any given load.

4.2.2.2 A digital indication shall display at least one figure beginning at the extreme right.

Where the scale interval is changed automatically the decimal sign shall maintain its position in the display.

A decimal fraction shall be separated from its integer by a decimal sign (comma or dot), with the indication showing at least one figure to the left of the sign and all figures to the right.

Zero may be indicated by one zero to the extreme right, without a decimal sign.

The unit of mass shall be chosen so that weight values have not more than one non-significant zero to the right. For values with decimal sign, the non-significant zero is allowed only in the third position after the decimal sign.

4.2.3 Limits of indication

There shall be no indication above Max + 9 e.

4.2.4 Approximate indicating device

The scale interval of an approximate indicating device shall be greater than Max/100 without being smaller than 20 e. This approximate device is considered as giving secondary indications.

4.2.5 Extending the range of self-indication on a semi-self-indicating instrument

The extension interval of the range of self-indication shall not be greater than the value of the self-indication capacity.

Acceptable solutions

(a) The scale interval of extension of the range of self-indication should be equal to the capacity of self-indication (comparator instruments are excluded from this provision).

(b) An extension device with accessible sliding poises is subject to the requirements of 6.2.2.

(c) On an extension device with enclosed sliding poises or mass switching mechanisms, each extension should involve an adequate change in the numbering. It should be possible to seal the housing and the adjusting cavities of the weights or masses.

4.3 Analogue indicating device

The following requirements apply in addition to those in 4.2.1 through 4.2.4.

4.3.1 Scale marks; length and width

Scales shall be designed and numbered so that reading the weighing result is easy and unambiguous.

Acceptable solutions

(a) Form of scale marks

Scale marks should consist of lines of equal thickness; this thickness should be constant and be between 1/10 and 1/4 of the scale spacing, without being less than 0.2 mm. The length of the shortest scale mark should be at least equal to the scale spacing.

(b) Arrangement of scale marks

Scale marks should be arranged in accordance with one of the sketches in Figure 5 (the line joining the end of the scale marks is optional).

Figure 5 Examples of application to rectilinear scales

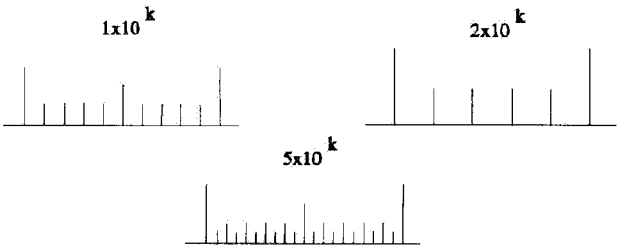

(c) Numbering

On one scale, the scale interval of numbering should be:

– constant,

– in the form 1×10^k, 2×10^k, 5×10^k units (k being a positive or negative whole number or equal to zero),

– not greater than 25 times the scale interval of the instrument.

If the scale is projected on a screen, at least two numbered scale marks should appear wholly in the projected zone.

The height of the numbers (real or apparent) expressed in millimetres should be not less than 3 times the minimum reading distance expressed in metres, without being less than 2 mm.

This height should be proportional to the length of the scale mark to which it relates.

The width of a number, measured parallel to the base of the scale, should be less than the distance between two consecutive numbered scale marks.

（d）Indicating component

The width of the pointer of the indicating component should be approximately equal to that of the scale marks and of a length such that the tip is at least level with the middle of the shortest mark.

The distance between the scale and the pointer should be at most equal to the scale spacing, without being greater than 2 mm.

4.3.2 Scale spacing

The minimum value i_o of the scale spacing shall be equal to:

– on an instrument of class (I) or (II) :

1 mm for indicating devices,

0.25 mm for complementary indicating devices; in this case i_o is the relative movement between the indicating component and the projected scale corresponding to the verification scale interval of the instrument,

– on an instrument of class (III) or (IIII) :

1.25 mm for dial indicating devices,

1.75 mm for optical projection indicating devices.

Acceptable solution

The scale spacing (real or apparent) i, in millimetres, should be at least equal to $(L + 0.5)\ i_o$, where:

i_o is the minimum scale spacing, in millimetres

L is the minimum reading distance, in metres; at least, L = 0.5 m.

The greatest scale spacing should not exceed 1.2 times the smallest scale spacing of the same scale.

4.3.3 Limits of indication

Stops shall limit the movement of the indicating component whilst allowing it to travel below zero and above the capacity of self-indication. This requirement does not apply to multi-revolution dial instruments.

Acceptable solution

The stops limiting the movement of the indicating component should permit it to travel across zones of at least 4 scale space below zero and above the capacity of self-indication (these zones are not provided with a scale on fan charts and on dials with a single revolution pointer; they are called "blank zones").

4.3.4 Damping

The damping of the oscillations of the indicating component or of the movable scale shall be adjusted to a value slightly below "critical damping", whatever the influence factors.

Acceptable solution

Damping should achieve a stable indication after three, four or five half periods of oscillation.

Hydraulic damping elements sensitive to variations in temperature should be provided with a automatic regulating device or an easily accessible manual regulating device.

It should be impossible for the fluid of hydraulic damping elements on portable instruments to spill when

the instrument is inclined at 45°.

4.4 Digital indicating and printing devices

The following requirements apply in addition to those in 4.2.1 through 4.2.5.

4.4.1 Change of indication

After a change in load, the previous indication shall not persist for longer than 1 second.

4.4.2 Stable equilibrium

Equilibrium is deemed to be stable when:

– in case of printing and/or data storage, the requirements in 4.4.5, last paragraph, are met,

– in case of zero or tare operations (4.5.4, 4.5.6, 4.5.7 and 4.6.8), it is sufficiently close to the final equilibrium to allow a correct operation of the device within relevant accuracy requirements.

4.4.3 Extended indicating device

An extended indicating device shall not be used on an instrument with a differentiated scale division.

When an instrument is fitted with an extended indicating device, displaying the indication with a scale interval smaller than e shall be possible only:

– during pressing a key, or

– for a period not exceeding 5 seconds after a manual command.

In any case printing shall not be possible.

4.4.4 Multiple use of indicating devices

Indications other than primary indications may be displayed in the same indicating device, provided that:

– quantities other than weight values are identified by the appropriate unit of measurement, or symbol thereof, or a special sign,

– weight values that are not weighing results (T.5.2.1 through T.5.2.3) shall be clearly identified, or they may be displayed only temporarily on manual command and shall not be printed.

No restrictions apply if the weighing mode is made inoperative by a special command.

4.4.5 Printing device

Printing shall be clear and permanent for the intended use. Printed figures shall be at least 2 mm high.

If printing takes place, the name or the symbol of the unit of measurement shall be either to the right of the value or above a column of values.

Printing shall be inhibited when the equilibrium is not stable.

Stable equilibrium is considered to be achieved when over a period of 5 seconds following print-out no more than two adjacent values are indicated, one of which being the printed value (*).

(*) Note: In case of instruments with $d < e$ the differentiated scale divisions are not considered.

4.4.6 Memory storage device

The storage of primary indications for subsequent indication, data transfer, totalizing, etc. shall be inhibited when the equilibrium is not stable. The criterion of stable equilibrium is the same as in 4.4.5.

4.5 Zero-setting and zero-tracking devices

An instrument may have one or more zero-setting devices and shall have not more than one zero-tracking device.

4.5.1 Maximum effect

The effect of any zero-setting device shall not alter the maximum weighing capacity of the instrument.

The overall effect of zero-setting and zero-tracking devices shall be not more than 4 %, and of the initial zero-setting device not more than 20 %, of the maximum capacity (*).

A wider range is possible for the initial zero-setting device if tests show that the instrument complies with 3.5, 3.6, 3.8 and 3.9 for any load compensated by this device within the specified range.

(*) This provision does not affect an instrument of class (IIII), except if it is used for commercial transactions.

4.5.2 Accuracy

After zero setting the effect of zero deviation on the result of the weighing shall be not more than 0.25 e; however, on an instrument with auxiliary indicating devices this effect shall be not more than 0.5 d.

4.5.3 Multiple range instrument

Zero setting in any weighing range shall be effective also in the greater weighing ranges, if switching to a greater weighing range is possible while the instrument is loaded.

4.5.4 Control of the zero-setting device

An instrument, except an instrument according to 4.14 and 4.15, whether or not equipped with an initial zero-setting device, may have a combined semi-automatic zero-setting device, and a semi-automatic tare-balancing device operated by the same key.

If an instrument has a zero-setting device and a tare-weighing device the control of the zero-setting device shall be separate from that of the tare-weighing device.

A semi-automatic zero-setting device shall function only:

– when the instrument is in stable equilibrium,

– if it cancels any previous tare operation.

4.5.5 Zero indicating device on an instrument with digital indication

An instrument with digital indication shall have a device that displays a special signal when the deviation from zero is not more than 0.25 e. This device may also work when zero is indicated after a tare operation.

This device is not mandatory on an instrument that has an auxiliary indicating or a zero-tracking device provided that the rate of zero-tracking is not less than 0.25 d/second.

4.5.6 Automatic zero-setting device

An automatic zero-setting device shall operate only when:

– the equilibrium is stable, and

– the indication has remained stable below zero for at least 5 seconds.

4.5.7 Zero-tracking device

A zero-tracking device shall operate only when:

– the indication is at zero, or at a negative net value equivalent to gross zero, and

– the equilibrium is stable, and

– the corrections are not more than 0.5 d/second.

When zero is indicated after a tare operation, the zero-tracking device may operate within a range of 4 % of Max around the actual zero value.

4.6 Tare device

4.6.1 General requirements

A tare device shall comply with the relevant provisions of 4.1 through 4.4.

4.6.2 Scale interval

The scale interval of a tare-weighing device shall be equal to the scale interval of the instrument for any given load.

4.6.3 Accuracy

A tare device shall permit setting the indication to zero with an accuracy better than:

±0.25 e for electronic instruments and any instrument with analogue indication,

±0.5 d for mechanical instruments with digital indication and instruments with auxiliary indicating devices.

On a multi-interval instrument e shall be replaced by e_1.

4.6.4 Operating range

The tare device shall be such that it cannot be used at or below its zero effect or above its maximum indicated effect.

4.6.5 Visibility of operation

Operation of the tare device shall be visibly indicated on the instrument. In the case of instruments with digital indication this shall be done by marking the indicated net value with the sign "NET" (*).

Note: If an instrument is equipped with a device that allows the gross value to be displayed temporarily while a tare device is in operation, the "NET" symbol shall disappear while the gross value is displayed.

This is not required for an instrument with a combined semi-automatic zero-setting device and a semi-automatic tare-balancing device operated by the same key.

The term "淨重" may be replaced by "NET", "Net" or "net", and "扣重" by "T".

Acceptable solution

The use of a mechanical tare adding device should be shown by the indication of the tare value, or by the display on the instrument of a sign, e.g. letter "T".

(*) NET may be displayed as "NET", "Net" or "net".

4.6.6 Subtractive tare device

When the use of a subtractive tare device does not allow the value of the residual weighing range to be known, a device shall prevent the use of the instrument above its maximum capacity or indicate that this capacity has been reached.

4.6.7 Multiple range instrument

On a multiple range instrument the tare operation shall be effective also in the greater weighing ranges, if switching to a greater weighing range is possible while the instrument is loaded.

4.6.8 Semi-automatic or automatic tare devices

These devices shall operate only when the instrument is in stable equilibrium.

4.6.9 Combined zero-setting and tare-balancing devices

If the semi-automatic zero-setting device and the semi-automatic tare-balancing device are operated by the same key, 4.5.2, 4.5.5 and if appropriate 4.5.7 apply at any load.

4.6.10 Consecutive tare operations

Repeated operation of a tare device is permitted.

If more than one tare device is operative at the same time, tare weight values shall be clearly designated when indicated or printed.

4.6.11 Printing of weighing results

Gross weight values may be printed without any designation. For a designation by a symbol, only "G" or "B" are permitted.

If only net weight values are printed without corresponding gross or tare values, they may be printed without any designation. A symbol for designation shall be "N". This applies also where semi-automatic zero setting and semi-automatic tare balancing are initiated by the same key.

Gross, net, or tare values determined by a multiple range instrument or by a multi-interval instrument need not be marked by a special designation referring to the (partial) weighing range.

If net weight values are printed together with the corresponding gross and/or tare values, the net and tare values shall at least be identified by the corresponding symbols "N" and "T".

The term "毛重" may be replaced by "G" or "B", "淨重" by "N", and "扣重" by "T".

If net weight values and tare values determined by different tare devices are printed separately, they shall be suitably identified.

4.7 Preset tare device

4.7.1 Scale interval

Regardless of how a preset tare value is introduced into the device, its scale interval shall be equal or automatically rounded to the scale interval of the instrument. On a multiple range instrument a preset tare value may only be transferred from one weighing range to another one with a larger verification scale interval but shall then be rounded to the latter. For a multi-interval instrument, the maximum preset tare value shall not be greater than Max_1 and the indicated or printed calculated net value shall be rounded to the scale interval of the instrument for the same net weight value.

4.7.2 Modes of operation

A preset tare device may be operated together with one or more tare devices provided that:

– 4.6.10 is respected, and

– a preset tare operation cannot be modified or cancelled as long as any tare device operated after the preset tare operation is still in use.

Preset tare devices may operate automatically only if the preset tare value is clearly identified with the load to be measured (e.g. by bar code identification on the container).

4.7.3 Indication of operation

For the indicating device 4.6.5 applies. It shall be possible to indicate the preset tare value at least temporarily.

4.6.11 applies accordingly provided that:

– if the calculated net value is printed at least the preset tare value is printed as well, with the exception of an instrument covered by 4.14, 4.15 or 4.17;

– the preset tare value is indicated by the term "預置扣重", and the term "預置扣重" may be replaced by "PT".

4.8 Locking positions

4.8.1 Prevention of weighing outside the "weigh" position

If an instrument has one or more locking devices, these devices shall only have two stable positions corresponding to "locked" and "weigh" and weighing shall only be possible in the "weigh" position.

A "pre-weigh" position may exist on an instrument of class (I) or (II), except those under 4.14, 4.15 and 4.17.

4.8.2 Indication of position

The "locked" and "weigh" positions shall be clearly shown.

4.9 Auxiliary verification devices (removable or fixed)

4.9.1 Devices with one or more platforms

The nominal value of the ratio between the weights to be placed on the platform to balance a certain load and this load shall not be less than 1/5000 (it shall be visibly indicated just above the platform).

The value of the weights needed to balance a load equal to the verification scale interval shall be an integer multiple of 0.1 gram.

4.9.2 Numbered scale devices

The scale interval of the auxiliary verification device shall be equal to or smaller than 1/5 of the verification scale interval for which it is intended.

4.10 Selection of weighing ranges on a multiple range instrument

The range which is actually in operation shall be clearly indicated.

Manual selection of the weighing range is allowed:

– from a smaller to a greater weighing range, at any load,

– from a greater to a smaller weighing range, when there is no load on the load receptor, and the indication is zero or at a negative net value; the tare operation shall be cancelled, and zero shall be set to $\pm$ 0.25 e_1, both automatically.

Automatic change over is allowed:

– from a smaller to the following greater weighing range when the load exceeds the maximum gross weight of the range being operative,

– only from a greater to the smallest weighing range when there is no load on the load receptor, and the indication is zero or at a negative net value; the tare operation shall be cancelled and zero shall be set to $\pm$ 0.25 e_1, both automatically.

4.11 Devices for selection (or switching) between various load receptors-load transmitting devices and various load measuring devices

4.11.1 Compensation of no-load effect

The selection device shall ensure compensation for the unequal no-load effect of the various load receptors – load transmitting devices in use.

4.11.2 Zero-setting

Zero-setting of an instrument with any multiple combination of various load measuring devices and various load receptors shall be possible without ambiguity and in accordance with the provisions of 4.5.

4.11.3 Impossibility of weighing

Weighing shall not be possible while selection devices are being used.

4.11.4 Identification of the combinations used

Combinations of load receptors and load measuring devices used shall be readily identifiable.

4.12 Requirements for load cells

These requirements replace 3.5.4 for load cell(s) of an instrument, that have been tested separately according to the International Recommendation OIML R 60 "Metrological regulations for load cells" which assigns a fraction $p_i = 0.7$ of the maximum permissible error of the complete instrument to a load cell.

3.9.2.3, 3.9.4.1 and 3.9.4.2 are deemed to be satisfied if the load cell(s) meet(s) the following requirements.

4.12.1 Maximum capacity of the load cell

The maximum capacity of the load cell shall satisfy the condition:

$$E_{max} \geqq Q \cdot Max \cdot R/N$$

where:

E_{ma} = maximum capacity of the load cell

N = number of load cells

R = reduction ratio (see T.3.3)

Q = correction factor

The correction factor $Q > 1$ considers the possible effects of eccentric loading, dead load of the load receptor, initial zero setting range and non uniform distribution of the load.

4.12.2 Maximum number of load cell intervals

For each load cell the maximum number of load cell intervals n_{LC} (see OIML R 60) shall not be less than the number of verification scale intervals n of the instrument:

$$n_{LC} \geqq n$$

On a multiple range or multi-interval instrument, this applies to any individual weighing range or partial weighing range:

$$n_{LC} \geqq n_i$$

On a multi-interval instrument, the minimum dead load output return DR (see OIML R 60) shall satisfy the condition:

$$DR \leqq 0.5 \cdot e_1 \cdot R/N$$

Acceptable solution

Where DR is not known, the condition $n_{LC} \geqq Max_r/e_1$ should be satisfied.

Furthermore on a multiple range instrument where the same load cell(s) is (are) used for more than one range, the minimum dead load output return DR of the load cell (see OIML R 60) shall satisfy the condition

$$DR \leqq e_1 \cdot R/N$$

Acceptable solution

Where DR is not known, the condition $n_{LC} \geqq 0.4 \cdot Max_r/e_1$ should be satisfied.

4.12.3 Minimum load cell verification interval

The minimum load verification interval v_{min} (see OIML R 60) shall not be greater than the verification scale interval e multiplied by the reduction ratio R of the load transmitting device and divided by the square root of the number N of load cells, as applicable:

$$v_{min} \leq e \cdot R/\sqrt{N}$$

On a multiple range instrument where the same load cell(s) is (are) used for more than one range, or a multi-interval instrument, e is to be replaced by e_1.

4.13 "Plus" and "minus" comparator instrument

For the purposes of verification, a "plus" and "minus" comparator instrument is considered to be a semi-self-indicating instrument.

4.13.1 Distinction between "plus" and "minus" zones

On an analogue indicating device the zones situated on either side of zero shall be distinguished by "+" and "–" signs.

On a digital indicating device an inscription near the indicating device shall be given:

– range $\pm \cdots u_m$, or

– range $- \cdots u_m / + \cdots u_m$,

where u_m represents the unit of measurement as per 2.1.

4.13.2 Form of scale

The scale of a comparator instrument shall have at least one scale division d = e on either side of zero. The corresponding value shall be shown at either end of the scale.

4.14 Instrument for direct sales to the public

The following requirements apply to an instrument of class (II), (III) or (IIII) designed to be used for direct-sale to the public.

4.14.1 Primary indications

On an instrument for direct sales to the public the primary indications are the weighing result and information about correct zero position, tare and preset tare operations.

4.14.2 Zero-setting device

An instrument for direct sales to the public shall not be fitted with a non-automatic zero-setting device unless operated only with a tool.

4.14.3 Tare device

A mechanical instrument with a weight receptor shall not be fitted with a tare device.

An instrument with one platform may be fitted with tare devices if they allow the public to see:

– whether they are in use, and

– whether their setting is altered.

Only one tare device shall be in operation at any given time.

Note: The restrictions in use are included under 4.14.3.2, 2nd indent.

An instrument shall not be fitted with a device which can recall the gross value while a tare or preset tare device is in operation.

4.14.3.1 Non-automatic tare device

A displacement of 5 mm of a point of the control shall be at most equal to one verification scale interval.

4.14.3.2 Semi-automatic tare device

An instrument may be fitted with semi-automatic tare devices if:

– the action of the tare devices does not permit a reduction of the value of the tare, and

– their effect can only be cancelled when there is no load on the load receptor.

In addition, the instrument shall comply with at least one of the following requirements:

1. the tare value is indicated permanently in a separate display,
2. the tare value is indicated with a sign "–" (minus), when there is no load on the load receptor, or
3. the effect of the device is cancelled automatically and the indication returns to zero when unloading the load receptor after a stable net weighing result greater than zero has been indicated.

4.14.3.3 Automatic tare device

An instrument shall not be fitted with an automatic tare device.

4.14.4 Preset tare device

A preset tare device may be provided if the preset tare value is indicated as a primary indication on a separate display which is clearly differentiated from the weight display. 4.14.3.2, first paragraph, applies.

It shall not be possible to operate a preset tare device if a tare device is in use.

Where a preset tare is associated with a price look up (PLU) the preset tare value may be cancelled at the same time as the PLU is cancelled.

4.14.5 Impossibility of weighing

It shall be impossible to weigh or to guide the indicating element during the normal locking operation or during the normal operation of adding or subtracting weights.

4.14.6 Visibility

All primary indications shall be displayed clearly and simultaneously to both the vendor and the customer.

On digital devices that display primary indications, the numerical figures on either set shall be of the same dimension and at least 10 mm high, with a tolerance of 0.5 mm.

On an instrument to be used with weights it shall be possible to distinguish the value of the weights.

Acceptable solution

The primary indications should be grouped together in two sets of scales or displays.

4.14.7 Auxiliary and extended indicating devices An instrument shall not be fitted with an auxiliary indicating device nor an extend ed indicating device.

4.14.8 Instruments of class (II)

Instruments of class (II) shall comply with the requirements given in 3.9 for instruments of class (III).

4.14.9 Significant fault

When a significant fault has been detected, a visible or audible alarm shall be provided for the customer, and data transmission to any peripheral equipment shall be prevented. This alarm shall continue until such time as the user takes action or the cause disappears.

4.14.10 Counting ratio

The counting ratio on a mechanical counting instrument shall be 1/10 or 1/100.

4.15 Additional requirements for an instrument for direct sales to the public with price indication

The following requirements are to be applied in addition to 4.14.

4.15.1 Primary indications

On a price-indicating instrument the supplementary primary indications are unit price and price to pay and, if applicable, number, unit price and price to pay for non-weighed articles, prices for non-weighed articles and price totals. Price charts, such as fan charts, are not subject to the requirements of this Recommendation.

4.15.2 Instrument with price scales

For unit price and price-to-pay scales, 4.2 and 4.3.1 through 4.3.3 apply accordingly; however, decimal fractions shall be indicated according to national regulations.

Reading from price scales shall be so possible that the absolute value of the difference between the product of the indicated weight W and unit price U and the indicated price to pay P is not greater than the product of e and the unit price for that scale:

$$|W \cdot U - P| \leqq e \cdot U$$

4.15.3 Price computing instrument

The price to pay shall be calculated and rounded to the nearest interval of price to pay, by multiplication of weight and unit price, both as indicated by the instrument. The device which performs the calculation is in any case considered a part of the instrument.

The interval of price to pay shall be NTD 1.

The unit price is restricted to Price/100 g or Price/kg.

Notwithstanding the provision in 4.4.1, the indications of weight, unit price and price to pay shall remain visible after the weight indication is stable, and after any introduction of the unit price, for at least one second and while the load is on the load receptor.

Notwithstanding the provision in 4.4.1, these indications may remain visible for no more than 3 seconds after removing the load, provided that the weight indication has been stable before and the indication would otherwise be zero. As long as there is a weight indication after removing the load, it shall not be possible to introduce or change a unit price.

If transactions performed by the instrument are printed, weight, unit price and price to pay shall all be printed.

The data may be stored in a memory of the instrument before printing. The same data shall not be printed twice on the ticket for the customer.

Instruments that can be used for price labelling purposes must comply with 4.17 as well.

4.15.4 Special applications of a price computing instrument

Only if all transactions performed by the instrument or by connected peripherals are printed on a ticket or label intended for the customer, a price computing instrument may perform additional functions which facilitate trade and management. These functions shall not lead to confusion about the results of weighing and price computing.

Other operations or indications not covered by the following provisions may be performed, provided that no indication which could possibly be misunderstood as a primary indication is presented to the customer.

4.15.4.1 Non-weighed articles

An instrument may accept and record positive or negative prices to pay of one or several non-weighed articles, provided that the weight indication is zero or the weighing mode is made inoperative. The price to pay for one or more of such articles shall be shown in the price-to-pay display.

If the price to pay is caculated for more than one equal articles, the number of articles shall be shown on the weight display, without being possibly taken for a weight, and the price for one article on the

unit price display, unless supplementary displays are used to show the number of articles and the article price.

4.15.4.2 Totalization

An instrument may totalize transactions on one or several tickets; the price total shall be indicated on the price-to-pay display, and printed accompanied by a special word or symbol, either at the end of the price-to-pay column, or on a separate label or ticket with appropriate reference to the commodities whose prices to pay have been totalized; all prices to pay that are totalized shall be printed, and the price total shall be the algebraic sum of all these prices as printed.

An instrument may totalize transactions performed on other instruments linked to it, directly or over metrologically controlled peripherals, under the provisions of 4.15.4 and if the price-to-pay scale intervals of all connected instruments are identical.

4.15.4.3 Multi-vendor operation

An instrument may be designed to be used by more than one vendor or to serve more than one customer at the same time, provided that the connection between the transactions and the relevant vendor or customer is appropriately identified.

4.15.4.4 Cancellation

An instrument may cancel previous transactions. Where the transaction has already been printed, the relevant price to pay cancelled shall be printed with an appropriate comment. If the transaction to be cancelled is displayed to the customer it shall be clearly differentiated from normal transactions.

4.15.4.5 Additional information

An instrument may print additional information if this is clearly correlated to the transaction and does not interfere with the assignment of the weight value to the unit symbol.

4.15.5 Self-service instrument

A self-service instrument need not have two sets of scales or displays.

If a ticket or a label is printed, the primary indications shall include a designation of the product when the instrument is used to sell different products.

4.16 Instrument similar to one normally used for direct sales to the public

An instrument similar to one normally used for direct sales to the public which does not comply with the provisions of 4.14 and 4.15 shall carry, near the display, the indelible marking:

"Not to be used for direct sales to the public".

4.17 Price-labeling instrument

4.14.8, 4.15.3 (paragraphs 1 and 5), 4.15.4.1 (paragraph 1) and 4.15.4.5 apply.

A price-labeling instrument shall have at least one display for the weight. It may be used temporarily for set-up purposes such as supervision of setting weight limits, unit prices, preset tare values, commodity names.

It shall be possible to verify, during use of the instrument, the actual values of unit price and preset tare value.

Printing below minimum capacity shall not be possible.

Printing of labels with fixed values of weight, unit price and price to pay is allowed provided that the weighing mode is made inoperative.

4.18 Mechanical counting instrument with unit-weight receptor

For the purpose of verification a counting instrument is considered to be a semi-self-indicating instrument.

4.18.1 Indicating device

To permit verification, a counting instrument shall have a scale with at least one scale division d = e on

either side of zero; the corresponding value shall be shown on the scale.

4.18.2 Counting ratio

The counting ratio shall be shown clearly just above each counting platform or each counting scale mark.

5. Requirements for electronic instruments

In addition to clauses 3 and 4, an electronic instrument shall comply with the following requirements.

5.1 General requirements

5.1.1 An electronic instrument shall be designed and manufactured such that, when it is exposed to disturbances:

either, (a) significant faults do not occur, or

(b) significant faults are detected and acted upon. The indication of significant faults in the display should not be confusing with other messages that appear in the display.

Note: A fault equal to or smaller than e is allowed irrespective of the value of the error of indication.

5.1.2 The requirements in 3.5, 3.6, 3.8, 3.9 and 5.1.1 shall be met durably, in accordance with the intended use of the instrument.

5.1.3 A pattern of an electronic instrument is presumed to comply with the requirements in 5.1.1, 5.1.2 and 5.3.2 if it passes the examinations and tests specified in 5.4.

5.1.4 The requirements in 5.1.1 may be applied separately to:

（a） each individual cause of significant fault, and/or

（b） each part of the electronic instrument.

The choice, whether 5.1.1 (a) or 5.1.1 (b) is applied, is left to the manufacturer.

5.2 Acting upon significant faults

When a significant fault has been detected, the instrument shall either be made inoperative automatically or a visual or audible indication shall be provided automatically and shall continue until such time as the user takes action or the fault disappears.

5.3 Functional requirements

5.3.1 Upon switch-on (switch-on of indication), a special procedure shall be performed that shows all relevant signs of the indicator in their active and non-active state sufficiently long to be checked by the operator.

5.3.2 In addition to 3.9, an electronic instrument shall comply with the requirements under a relative humidity of 85 % at the upper limit of the temperature range. This is not applicable to an electronic instrument of class Ⓘ, and of class Ⓘⓘ if e is less than 1 g.

5.3.3 Electronic instruments, class Ⓘ instruments excepted, shall be subjected to the span stability test specified in 5.4.4. The error near maximum capacity shall not exceed the maximum permissible error and the absolute value of the difference between the errors obtained for any two measurements shall not exceed half the verification scale interval or half the absolute value of the maximum permissible error, whichever is greater.

5.3.4 When an electronic instrument is subjected to the disturbances specified in 5.4.3, the difference between the weight indication due to the disturbance and the indication without the disturbance (intrinsic error), shall not exceed e or the instrument shall detect and react to a significant fault.

5.3.5 During the warm-up time of an electronic instrument there shall be no indication or transmission of the weighing result.

5.3.6 An electronic instrument may be equipped with interfaces permitting the coupling of the instrument to any peripheral devices or other instruments.

An interface shall not allow the metrological functions of the instrument and its measurement data to be inadmissibly influenced by the peripheral devices (for example computers), by other interconnected instruments, or by disturbances acting on the interface.

Functions that are performed or initiated via an interface shall meet the relevant requirements and conditions of clause 4.

Note: An "interface" comprises all mechanical, electrical and logic properties at the data interchange point between an instrument and peripheral devices or other instruments.

5.3.6.1 It shall not be possible to introduce into an instrument, through an interface, instructions or data intended or suitable to:

– display data that are not clearly defined and could be mistaken for a weighing result,

– falsify displayed, processed or stored weighing results,

– adjust the instrument or change any adjustment factor; however instructions may be given through the interface to carry out an adjustment procedure using a span adjustment device incorporated inside the instrument or, for instruments in class (I), using an external standard-mass,

– falsify primary indications displayed in case of direct sales to the public.

5.3.6.2 An interface through which the functions mentioned in 5.3.6.1 cannot be performed or initiated, need not be secured. Other interfaces shall be secured as per 4.1.2.4.

5.3.6.3 An interface intended to be connected to a peripheral device to which the requirements of this Recommendation apply, shall transmit data relating to primary indications in such a manner that the peripheral device can meet the requirements.

5.3.7 A battery-operated electronic instrument shall either continue to function correctly or not indicate any weight values whenever the voltage is below the manufacturer's specified value.

5.4 Performance and span stability tests

5.4.1 Test considerations

All electronic instruments of the same category, whether or not equipped with checking facilities, shall be subjected to the same performance test programme.

5.4.2 State of instrument under test

Performance tests shall be carried out on fully operational equipment in its normal operational state or in a status as similar as possible thereto. When connected in other than a normal configuration, the procedure shall be mutually agreed by the approval authority and the applicant and shall be described in the test document.

If an electronic instrument is equipped with an interface permitting the coupling of the instrument to external equipment, the instrument shall, during the tests B.3.2, B.3.3 and B.3.4, be coupled to external equipment, as specified by the test procedure.

5.4.3 Performance tests Performance tests shall be performed according to B.2 and B.3.

Table 8

Test	Characteristic under test
Static temperatures	Influence factor
Damp heat, steady state	Influence factor
Power voltage variations	Influence factor
Short time power reductions	Disturbance
Bursts (transients)	Disturbance
Electrostatic discharge	Disturbance

Electromagnetic susceptibility Disturbance

5.4.4 Span stability test

Span stability test shall be performed according to B.4.

6. Technical requirements for a non-self-indicating instrument

A non-self-indicating instrument shall comply with clauses 3 and 4, as far as applicable. This clause gives complementary provisions corresponding to some of the requirements of clause 4.

While the provisions of 6.1 are mandatory, those of 6.2 contain "acceptable solutions" as introduced in clause 4.

Provisions for certain simple instruments that may be submitted directly for initial verification are given in 6.3 through 6.9. These simple instruments are:

– simple equal arm and 1/10 ratio beams,

– simple steelyards with sliding poises,

– Roberval and Béranger instruments,

– instruments with ratio platforms,

– instruments of the steelyard type with accessible sliding poises.

6.1 Minimum sensitivity

An extra load equivalent to the absolute value of the maximum permissible error for the applied load, shall be placed on the instrument at equilibrium and shall cause a permanent displacement of the indicating element of at least:

1 mm for an instrument of class (I) or (II) ,

2 mm for an instrument of class (III) or (IIII) with Max $\leqq$ 30 kg,

5 mm for an instrument of class (III) or (IIII) with Max > 30 kg.

The sensitivity tests shall be carried out by placing extra loads with a slight impact, in order to eliminate the effects of discrimination threshold.

6.2 Acceptable solutions for indicating devices

6.2.1 General provisions

6.2.1.1 Equilibrium indicating component

Indicating component of relative displacement in relation to another indicating component: the two indices should be of the same thickness and the distance between them shall not exceed this thickness.

However, this distance may be equal to 1 mm, if the thickness of the indices is less than this value.

6.2.1.2 Securing

It should be possible to secure the sliding poises, the removable masses and the adjusting cavities or the housings of such devices.

6.2.1.3 Printing

If the device permits printing, this should be possible only if sliding bars or poises or a mass switching mechanism are each in a position corresponding to a whole number of scale divisions. Except for accessible sliding poises or bars, printing should be possible only if the equilibrium indicating component is in the reference position to within the nearest half scale interval.

6.2.2 Sliding poise device

6.2.2.1 Form of scale marks

On bars on which the scale interval is the verification scale interval of the instrument, the scale marks should consist of lines of constant thickness. On other major (or minor) bars the scale marks should consist of notches.

6.2.2.2 Scale spacing

The distance between scale marks should not be less than 2 mm and be of sufficient length so that the normal machining tolerances for notches or scale marks do not cause an error in the weighing result exceeding 0.2 of the verification scale interval.

6.2.2.3 Stops

The displacement of sliding poises and minor bars should be limited to the graduated part of major and minor bars.

6.2.2.4 Indicating component

Each sliding poise should be provided with an indicating component.

6.2.2.5 Accessible sliding poise device

There should be no moving parts in sliding poises, except sliding minor bars.

There should be no cavity on sliding poises that could accidentally hold foreign bodies.

It should be possible to secure parts that are detachable.

The displacement of sliding poises and minor bars should require a certain effort.

6.2.3 Indication by use of metrologically controlled weights

The reduction ratios should be in the form 10^k, k being an integer or zero.

On an instrument intended for direct sales to the public, the height of the raised edge of the weights receptor platform should not exceed one tenth of the greatest dimension of the platform, without being more than 25 mm.

6.3 Conditions of construction

6.3.1 Equilibrium indicating component

An instrument shall be provided with two moving indices or one moving indicating component and a fixed datum mark, the respective position of which indicates the reference position of equilibrium.

On an instrument of class (III) or (IIII) designed to be used for direct sales to the public, the indices and scale marks shall allow equilibrium to be seen from the opposite sides of the instrument.

6.3.2 Knives, bearings and friction plates

6.3.2.1 Types of connection

Levers shall be fitted with knives only; these shall be pivoted on bearings.

The line of contact between knives and bearings shall be a straight line.

Counter-beams shall be pivoted on knife-edges.

6.3.2.2 Knives

The knives shall be fitted to the levers in such a way that the invariability of the ratios of the lever arms is assured. They shall not be welded or soldered.

The edges of the knives of one and the same lever shall be practically parallel and shall be situated in

one plane.

6.3.2.3 Bearings

The bearings shall not be welded or soldered to their supports or in their mountings.

It shall be possible for bearings of an instrument with ratio platforms and steelyards to oscillate in all directions on their supports or in their mountings. On such instruments anti-disconnection devices shall prevent the disconnection of articulated parts.

6.3.2.4 Friction plates

The longitudinal play of the knives shall be limited by friction plates. There shall be point contact between knife and friction plates and it shall be situated on the extension of the line(s) of contact between knife and bearing(s).

The friction plate shall form a plane through the point of contact with the knife and its plane shall be perpendicular to the line of contact between knife and bearing. It shall not be welded or soldered to the bearings or their support.

6.3.3 Hardness

Contact parts of knives, bearings, friction plates, interlevers, interlever supports and links shall have a hardness of at least 58 Rockwell C.

6.3.4 Protective coating

A protective coating may be applied to the parts in contact of jointed components, provided that this does not lead to changes of metrological properties.

6.3.5 Tare devices

No instrument shall be fitted with a tare device.

6.4 Simple equal arm beam

6.4.1 Symmetry of the beams

The beam shall have two planes of symmetry, longitudinal and transversal. It shall be in equilibrium with or without the pans. Detachable parts which may be used equally well on either end of the beam shall be interchangeable and of equal mass.

6.4.2 Zero setting If an instrument of class (III) or (IIII) is provided with a zero-setting device, this shall be a cavity below one of the pans.

This cavity may be secured.

6.5 Simple 1/10 ratio beam

6.5.1 Indication of the ratio

The ratio shall be indicated legibly and permanently on the beam in the form 1:10 or 1/10.

6.5.2 Symmetry of the beam

The beam shall have a longitudinal plane of symmetry.

6.5.3 Zero setting

The provisions of 6.4.2 apply.

6.6 Simple sliding poise instrument (steelyard)

6.6.1 General

6.6.1.1 Scale marks The scale marks shall be lines or notches, either on the edge, or on the flat of the graduated shank.

The minimum scale spacing is 2 mm between notches and 4 mm between lines.

6.6.1.2 Pivots

The load per unit length on the knives shall be not more than 10 kg/mm.

The bores of bearings in the form of an annulus shall have a diameter at least equal to 1.5 times the largest dimension of the cross section of the knife.

6.6.1.3 Equilibrium indicating component

The length of the equilibrium indicating component, taken from the edge of the fulcrum knife-edge of the instrument, shall be not less than 1/15 of the length of the graduated part of the major sliding poise bar.

6.6.1.4 Distinctive mark

The head and the sliding poise of an instrument with detachable sliding poises shall bear the same distinctive mark.

6.6.2 Instrument with single capacity

6.6.2.1 Minimum distance between knife-edges

The minimum distance between knife-edges is:

25 mm for maximum capacities less than or equal to 30 kg,

20 mm for maximum capacities exceeding 30 kg.

6.6.2.2 Graduation

The graduation shall extend from zero to the maximum capacity.

6.6.2.3 Zero-setting

If an instrument of class (III) or (IIII) is provided with a zero-setting device, this shall be a captive screw or nut arrangement with a maximum effect of 4 verification scale intervals per revolution.

0

6.6.3.1 Minimum distance between knife-edges

The minimum distance between the knife-edges is:

45 mm for the lower capacity,

20 mm for the higher capacity.

6.6.3.2 Differentiation of suspension mechanisms

The suspension mechanism of an instrument shall be differentiated from the load suspension mechanism.

6.6.3.3 Numbered scales

The scales corresponding to each of the capacities of the instrument shall permit weighing from zero to maximum capacity, without a break in continuity:

– either without the two scales having a common part,

– or with a common part of not more than 1/5 of the highest value of the lower scale.

6.6.3.4 Scale intervals The scale intervals of each of the scales shall have a constant value.

6.6.3.5 Zero-setting devices Zero-setting devices are not permitted.

6.7 Roberval and Béranger instruments

6.7.1 Symmetry

Detachable symmetrical parts occurring in pairs shall be interchangeable and of equal mass.

6.7.2 Zero-setting

If an instrument is provided with a zero-setting device, this shall be a cavity below the support of one of the pans. This cavity may be secured.

6.7.3 Length of the knife-edges On an instrument having a simple beam:

– the distance between the outward ends of the load knife-edges shall be at least equal to the diameter of the bottom of the pan,

– the distance between the outward ends of the centre knife-edge shall be at least equal to 0.7 times the length of the load knife-edges.

A double beam instrument shall have a stability of the mechanism equal to that obtained with a simple beam instrument.

Figure 6

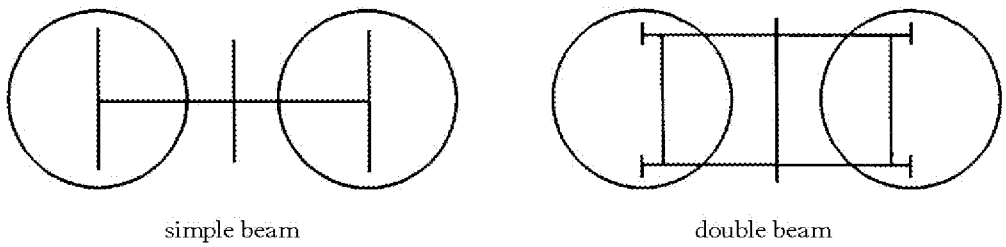

6.8 Instruments with ratio platforms

6.8.1 Maximum capacity The maximum capacity of the instrument shall be greater than 30 kg.

6.8.2 Indication of the ratio

The ratio between the weighed load and the equilibrium load shall be indicated legibly and permanently on the beam in the form 1:10 or 1/10.

6.8.3 Zero-setting

An instrument shall have a zero-setting device consisting:

– either of a cup with greatly convex cover,

– or of a captive screw or nut arrangement, with a maximum effect of 4 verification scale intervals per revolution.

6.8.4 Complementary balancing device

If an instrument is provided with a complementary device that avoids the use of weights which are of low value in relation to the maximum capacity, this device shall be a graduated steelyard with a sliding poise, the effect being additive and not more than 10 kg.

6.8.5 Locking of the beam

An instrument shall have a manual device for locking the beam, the action of which prevents the equilibrium indices coinciding when at rest.

6.8.6 Provisions relating to wooden parts

If certain parts of an instrument, such as the frame, the platform or the board are of wood, this shall be dry and free from defects. It shall be covered with a paint or an effective protective varnish.

No nails shall be used for the final assembly of wooden parts.

6.9 Instrument with a load-measuring device with accessible sliding poises (of the steelyard type)

6.9.1 General

The provisions of 6.2 relating to load measuring devices with accessible sliding poises shall be observed.

6.9.2 Range of numbered scale

The numbered scale of the instrument shall permit continuous weighing from zero to the maximum capacity.

6.9.3 Minimum scale spacing

The scale spacing i_x of the different bars (x = 1, 2, 3…) corresponding to the scale interval dof these bars, shall be:

$$i_x \geq \frac{d_x}{e} \cdot 0.05\,\text{mm} \quad \text{but } i_x \geq 2\,\text{mm}$$

6.9.4 Ratio platform

If an instrument is provided with a ratio platform for extending the indicating range of the numbered scale, the ratio between the value of the weights placed on the platform to balance a load and the load itself shall be 1/10 or 1/100.

This ratio shall be indicated legibly and permanently on the beam in a position close to the ratio platform, in the form: 1:10, 1:100, or 1/10, 1/100.

6.9.5 Zero-setting

The provisions of 6.8.3 apply

6.9.6 Locking of the beam

The provisions of 6.8.5 apply.

6.9.7 Wooden parts

The provisions of 6.8.6 apply.

7. Marking of an instrument

7.1 Descriptive markings

An instrument shall carry, in order, the following markings.

7.1.1 Compulsory in all cases:

– manufacturer's mark, or name written in full

– indication of accuracy class in the form of a Roman number in an oval (*):

for special accuracy	(I)
for high accuracy	(II)
for medium accuracy	(III)
for ordinary accuracy	(IIII)
– maximum capacity in the form	Max … or 最大秤量…
– minimum capacity in the form	Min … or 最小秤量…

– verification scale interval in the form e = or 檢定標尺分度值…

(*) See footnote to 3.1.1.

7.1.2 Compulsory if applicable:

– name or mark of manufacturer's agent for an imported instrument

– serial number

– identification mark on each unit of an instrument consisting of separate but associated units

– type approval mark

– scale interval, if d < e, in the form d =

or 標尺分度值…

– maximum additive tare effect in the form T = + …

– maximum subtractive tare effect if different from Max in the form T = – … (*)

(*) Max may be also interpreted as the actual range of indication, as per 4.2.3.

– maximum safe load in the form Lim = …

(if the manufacturer has provided for a maximum safe load of more than Max + T)

– the special temperature limits

within which the instrument complies

with the prescribed conditions of correct operation in the form: … °C/… °C

– counting ratio on a counting instrument according to 4.18 in the form 1:… or 1/…

– ratio between weight platform and load platform in the specified in 6.5.1, 6.8.2 and 6.9.4,

– range of plus/minus indication of a digital comparator instrument, in the form ±… u_m or – … u_m/+ … u_m, u_m standing for the unit of mass as per 2.1.

7.1.3 Additional markings

Additional markings may, if necessary, be required on an instrument according to its particular use or to certain special characteristics, such as e.g.:

– not to be used for direct sales to the public/commercial transactions

– to be used exclusively for: .....

– the stamp does not guarantee/guarantees only .....

– to be used only as follows: .....

7.1.4 Presentation of descriptive markings

The descriptive markings shall be indelible and of a size, shape and clarity allowing easy reading.

They shall be grouped together in a clearly visible place either on a descriptive plate fixed to an instrument, or on a part of the instrument itself.

The markings: Max …

Min …

e …

and d if d ≠ e

shall also be shown near the display of the result if they are not already located there.

It shall be possible to seal the plate bearing the descriptive markings unless its removal will result in its destruction. If the data plate is sealed, it shall be possible to apply a control mark to it.

Acceptable solutions

(a) Markings in special cases

In special cases, some of the markings should be in the form of a table; see examples in Figure 7.

Figure 7

For a multi-interval instrument	For an instrument with more than one weighing range (W1, W2)		For an instrument with weighing ranges in different classes	
	W1	W2	W1 (II)	W2 (III)
Max 2/5/15 kg Min 20 g e = 1/2/5 g	Max 20 kg Min 200 g e = 10 g	100 kg 1 kg 50 g	Max 1 000 g Min 1 g e = 0.1 g d = 0.02 g	5 000 g 40 g 2 g 2 g

（b） Dimensions

When several plates are placed one above the other (as for example in the case of an instrument consisting of several separate devices), they should be of the same width. This common width is fixed at 80 mm.

（c） Fixing

The plate should be fixed by rivets or screws with one of the rivets of red copper or material having qualities recognised as similar.

It should be possible to secure the head of one of the screws by means of a lead cap inserted in a device that cannot be dismantled. The diameter of the rivet head or of the lead cap should be able to accommodate a stamp 4 mm in diameter.

The plate may be glued or consist of a transfer provided that its removal results in its destruction.

（d）Dimensions of the letters

The height of capital letters should be at least 2 mm.

7.1.5 Specific cases

7.1.1 through 7.1.4 apply in their entirety to a simple instrument made by one manufacturer.

When a manufacturer builds a complex instrument or when several manufacturers are involved in making a simple or complex instrument, the following additional provisions shall be applied.

7.1.5.1 Instrument having several load receptors and load measuring devices

Each load measuring device which is connected or can be connected to one or more load receptors, shall bear the descriptive markings relating to these, viz:

– identification mark,

– maximum capacity,

– minimum capacity,

– verification scale interval,

and, if appropriate, maximum safe load and maximum additive tare effect.

7.1.5.2 Instrument consisting of separately-built main parts

If main parts cannot be exchanged without altering the metrological characteristics of the instrument, each unit shall have an identification mark which shall be repeated in the descriptive markings.

7.2 Verification marks

7.2.1 Position

An instrument shall have a place for the application of verification marks.

This place shall:

– be such that the part on which it is located cannot be removed from the instrument without damaging the marks,

– allow easy application of the marks without changing the metrological qualities of the instrument,

– be visible without the instrument having to be moved when it is in service.

7.2.2 Mounting

An instrument required to bear verification marks shall have a verification mark support, at the place provided for above, which ensures the conservation of the marks:

（a）when the mark is made with a stamp, this support may consist of a strip of lead or any other material with similar qualities, inserted into a plate fixed to the instrument, or a cavity bored in the instrument.

（b）when the mark is of the self-adhesive type, a space shall be provided on the instrument for the application of this mark.

Acceptable solution

For application of the verification marks a stamping area of at least 200 mm^2 is required.

If transfers are used as verification marks the space for these transfers shall have a diameter of at least 25 mm.

8. Metrological Managements

8.1 Liability of metrological controls

Metrological controls consist of type approval, initial verification, re-verification (e.g., periodical), and inspection in service, according to the relevant provisions of the Regulations Governing Type Approval of Measuring Instruments and Regulations Governing Verification and Inspection of Measuring Instruments.

8.2 Type approval

8.2.1 Application for type approval

The application for type approval shall include the submission to the approving authority of normally one instrument representative of the submitted pattern. Subject to agreement with the approving authority, the manufacturer may define and submit modules to be examined separately. This is particularly relevant in the following cases:

– where testing the instrument as a whole is difficult or impossible,

– where modules are manufactured and/or placed on the market as separate units to be incorporated in a complete instrument,

– where the applicant wants to have a variety of modules included in the approved pattern.

Acceptable solution

Typical modules are:

– load cells,

– electronic indicator, and

– connecting elements, both mechanical and electrical.

The following information and documents shall be provided by the applicant, as far as applicable.

8.2.1.1 Metrological characteristics:

– characteristics of the instrument, as per 7.1

– specifications of the modules or components of the measuring system, and when modules are submitted to be examined separately the fractions p_i of the error limits.

8.2.1.2 Descriptive documents:

– drawings of general arrangement and details of metrological interest including details of any interlocks, safeguards, restrictions, limits, etc.,

– a short functional description of the instrument,

– a short technical description including, if necessary, schematic diagrams of the method of operation in particular for internal processing and exchange via interface, of data and instructions. Adherence to requirements for which no test is available, such as software-based operations, may be demonstrated by a specific declaration of the manufacturer (e.g., for interfaces as per 5.3.6.1, and for password protected access to set-up and adjustment operations as per 4.1.2.4).

8.2.2 Pattern evaluation

The submitted documents shall be examined to verify compliance with the requirements of this Recommendation.

Suitable spotchecks shall be performed to establish confidence that the functions are performed correctly in accordance with the submitted documents. Reactions to significant faults need not be triggered.

The instruments shall be submitted to the testing procedures of Annex A, and of Annex B if applicable. If testing of the complete instrument is not possible, tests may, as agreed by the approving authority and the applicant, be performed:

– on a simulated set-up,

– on modules or main devices separately.

Where load cells are tested separately, the test equipment and preloading shall follow OIML R 60.

It may be feasible to perform the tests on premises other than those of the authority.

The approving authority may, in special cases, require the applicant to supply test loads, equipment and personnel to perform the tests.

The approving authorities are advised to consider the possibility of accepting, with the consent of the applicant, test data obtained from other national authorities, without repeating these tests (*).

Peripheral recipient devices need to be examined and tested only once while being connected to a weighing instrument, and may be declared as suitable for connection to any verified weighing instrument having an appropriate interface.

They may, at their discretion and under their responsibility, accept test data provided by the applicant for the submitted pattern, and reduce their own tests accordingly.

(*) This follows a Resolution adopted by the International Committee of Legal Metrology (CIML) in 1986, recognizing the interest which knowledge of the results of tests, that may have been carried out by other national metrology services, could have for certain national metrology services to which a submission for type approval of the same instrument was made, and urging the CIML Members to facilitate the exchange of such information, which in principle may only be provided with the agreement of the manufacturer, its representative or the importer of the instrument concerned.

8.3 Initial verification

This should be carried out according to the provisions of the Regulations Governing Verification and Inspection of Measuring Instruments and Technical Specifications for Verification and Inspection of Non-automatic Weighing Instruments.

8.4 Subsequent metrological control

This should be carried out according to the provisions of the Regulations Governing Verification and Inspection of Measuring Instruments and Technical Specifications for Verification and Inspection of Non-automatic Weighing Instruments.

9. Special Interim Provisions

9.1 Provisions for the use of auxiliary units of measurement

Converted indication or simultaneous indication of weighing results in auxiliary units of measurement is only permitted if the weighing instrument shows indication in legal units of measurement.

Indication of weighing results in auxiliary units of measurement is regarded as the main indication in this Specification (refer to Section T.1.3.1), and all requirements set forth in this Specification on indications in legal units of measurement apply to indications in auxiliary units.

The use of indications in auxiliary units of measurement shall also meet the following requirements:

9.1.1 Auxiliary units of measurement

The auxiliary units of measurement that may be used are Tai-*Chin*, Tai-*Liang* and Tai-*Chien*, and the symbols are "台斤", "台兩" and "台錢".

Conversions between auxiliary units of measurement and conversions between auxiliary units of measurement and legal units of measurement are as follows:

1 Tai-Chin = 0.6 kg

1 Tai-Liang=37.5g

1 Tai-Chin=16 Tai-Liang

1 Tai-Liang=10 Tai-Chien

9.1.2 Metrological requirements

9.1.2.1 Requirements of accuracy

Indications of weighing results in auxiliary units of measurement shall be capable of being correctly converted into indications in legal units of measurement, and rounded to the nearest scale interval.

The minimum weighing capacity in auxiliary units of measurement shall be not less than that in legal units of measurement, and the maximum capacity in auxiliary units of measurement not more than that in legal units of measurement.

9.1.2.2 Verification scale interval

The scale interval in auxiliary units of measurement shall be as close to the verification scale interval in legal units of measurement as possible.

The number of scale intervals in auxiliary units of measurement shall be as close to the number of verification scale intervals in legal units of measurement as possible.

If the scale interval in auxiliary units of measurement is larger than the verification scale interval in legal units of measurement or the number of scale intervals in auxiliary units of measurement is greater than that of the verification scale interval in legal units of measurement, the proportion using auxiliary units of measurement must be assessed at least through weighing performance, temperature and discrimination tests.

9.1.2.3 Accuracy classes

If the accuracy class in auxiliary units of measurement is different from that in legal units of measurement, the weighing instrument shall be classified into the lower accuracy class.

9.1.3 Technical requirements

9.1.3.1 Analog indicating device

It shall be clear that there is a difference between the scale marking in legal units of measurement and that in auxiliary units of measurement, lest the two be regarded as one scale by mistake.

The height of the digits on the scale in legal units of measurement must be at least 1.5 times that of the digits on the scale in auxiliary units of measurement.

9.1.3.2 Digital indicating device

Indication of weighing results in auxiliary units of measurement shall be able to be indicated in the Tai-Chin, Tai-Liang and Tai-Chien at the same time, and the readings shall be clear and readable. If a symbol is used for separation, it must be clearly different from the decimal point.

9.1.3.3 Pricing requirements

9.1.3.3.1 Limitation on unit price

When auxiliary units of measurement are used, the unit price is restricted to price/Tai-Chin or price/Tai-Liang.

9.1.3.3.2 Calculation of price to pay

When auxiliary units of measurement are used, the price to pay shall be calculated and rounded to the nearest interval of price to pay by multiplication of weighting results and unit price in auxiliary units of measurement.

9.2 Interim provisions on special applications of price computing weighing instruments

If the price computing weighing instrument is intended to perform the additional functions which facilitate trade and management prescribed in Sections 4.15.4.1~4.15.4.5 but it does not have the printing function prescribed in Section 4.15.4, the instrument shall not lead to confusion about the results of weighing and price computing when performing these functions, and the indication provided to the customer shall not be understood as a primary indication and shall comply with the following provisions.

9.2.1 Non-weighed articles

For the function of non-weighed articles prescribed in Section 4.15.4.1, an instrument may accept and record positive or negative prices to pay of one or several non-weighed articles and may re-display, provided that the weight indication is zero or the weighing mode is made inoperative. The price to pay for one or more of such articles shall be shown in the price-to-pay display.

If the price to pay is calculated for more than one equal articles, the number of articles shall be shown on the weight display, without being possibly taken for a weight, and the price for one article on the unit price display, unless supplementary displays are used to show the number of articles and the article price.

9.2.2 Totalization

For the function of totalization prescribed in Section 4.15.4.2, if the weighing instrument totalizes several transactions, it shall be able to re-display all the weighing results, unit prices and prices to pay totalized, and the price total shall be the algebraic sum of all the prices totalized.

9.2.3 Multi-vendor operation

For the function of multi-vendor operation prescribed in Section 4.15.4.3 is prohibited.

9.2.4 Cancellation

For the function of cancellation prescribed in Section 4.15.4.4, if the transaction to be cancelled is displayed to the customer it shall be clearly differentiated from normal transactions.

9.2.5 Additional Information

These Interim Provisions shall not apply to the function of additional information prescribed in Section 4.15.4.5.

9.3 The requirements on larger capacity weighing instruments:

9.3.1 Larger weighing instruments means instruments that maximum capacity is greater than 100 kg.

9.3.2 The test items for larger capacity weighing instruments include weighing performance under ambient temperature, eccentricity, discrimination, repeatability, zero return, creep, stability of equilibrium, , tare(weighing test), warm-up time, voltage variations and span stability.

ANNEX A
(mandatory)

TESTING PROCEDURES FOR NONAUTOMATIC WEIGHING INSTRUMENTS

A.1 Administrative examination (8.2.1)

Review the documentation that is submitted, including necessary photographs, drawings, relevant technical specifications of main components, etc., to determine if it is adequate and correct. Consider the operational manual.

A.2 Compare construction with documentation (8.2.2)

Examine the various devices of the instrument to ensure compliance with the documentation.

A.3 Initial examination

A.3.1 Metrological characteristics

Note metrological characteristics according to the "Test Report".

A.3.2 Descriptive markings (7.1)

Check the descriptive markings according to the check-list given in the Test Report.

A.3.3 Stamping and securing (4.1.2.4 and 7.2)

Check the arrangements for stamping and securing according to the checklist given in the Test Report.

A.4 Performance tests

A.4.1 General conditions

A.4.1.1 Normal test conditions (3.5.3.1)

Errors shall be determined under normal test conditions. When the effect of one factor is being evaluated, all other factors are to be held relatively constant, at a value close to normal.

A.4.1.2 Temperature

The tests shall be performed at a steady ambient temperature, usually normal room temperature unless otherwise specified.

The temperature is deemed to be steady when the difference between the extreme temperatures noted during the test does not exceed one-fifth of the temperature range of the given instrument without being greater than 5 °C (2 °C in the case of a creep test), and the rate of change does not exceed 5 °C per hour.

A.4.1.3 Power supply

Instruments using electric power shall normally be connected to the power supply and "on" throughout the tests.

A.4.1.4 Reference position before tests

For an instrument liable to be tilted, the instrument shall be leveled at its reference position.

A.4.1.5 Automatic zero-setting and zero-tracking

During the tests, the effect of the automatic zero-setting device or the zero-tracking device may be switched off or suppressed by starting the test with a load equal to say 10 e.

In certain tests where the automatic zero-setting or zero-tracking must be in operation (or not), specific mention of this is made in those test descriptions.

A.4.1.6 Indication with a scale interval smaller than e

If an instrument with digital indication has a device for displaying the indication with a smaller scale

interval (not greater than 1/5 e), this device may used to determine the error. If a device is used it should be noted in the Test Report.

A.4.1.7 Using a simulator to test modules (3.5.4 and 3.7.1)

If a simulator is used to test a module, the repeatability and stability of the simulator should make it possible to determine the performance of the module with at least the same accuracy as when a complete instrument is tested with weights, the mpe to be considered being those applicable to the module. If a simulator is used, this shall be noted in the Test Report and its traceability referenced.

A.4.1.8 Adjustment (4.1.2.5)

A semi-automatic span adjustment device shall be initiated only once before the first test.

An instrument of class (I) shall, if applicable, be adjusted prior to each test following the instructions in the operating manual.

Note: The temperature test A.5.3.1 is considered as one test.

A.4.1.9 Recovery

After each test the instrument should be allowed to recover sufficiently before the following test.

A.4.1.10 Preloading

A.4.1.11 Multiple range instrument

Before each weighing test the instrument shall be pre-loaded once to Max or to Lim if this is defined, except for the tests in A.5.2 and A.5.3.2.

In principle, each range should be tested as a separate instrument.

A.4.2 Checking of zero

A.4.2.1 Range of zero-setting (4.5.1)

A.4.2.1.1 Initial zero-setting

With the load receptor empty, set the instrument to zero. Place a test load on the load receptor and switch the instrument off and then back on. Continue this process until, after placing a load on the load receptor and switching the instrument on and off, it does not re-zero. The maximum load that can be re-zeroed is the positive portion of the initial zero-setting range.

Remove any load from the load receptor and set the instrument to zero. Then remove the load receptor (platform) from the instrument. If, at this point, the instrument can be reset to zero by switching it off and back on, the mass of the load receptor is used as the negative portion of the initial zero-setting range.

If the instrument cannot be reset to zero with the load receptor removed, add weights to any live part of the scale (e.g. on the parts where the load receptor rests) until the instrument indicates zero again.

Then remove weights and, after each weight is removed, switch the instrument off and back on. The maximum load that can be removed while the instrument can still be reset to zero by switching it off and on is the negative portion of the initial zero-setting range.

The initial zero-setting range is the sum of the positive and negative portions. If the load receptor cannot readily be removed, only the positive part of the initial zero-setting range need be considered.

A.4.2.1.2 Non-automatic and semi-automatic zero-setting

This test is performed in the same manner as described in A.4.2.1.1, except that the zero-setting means is used rather than switching the instrument off and on.

A.4.2.1.3 Automatic zero-setting

Remove the load receptor as described in A.4.2.1.1 and place weights on the instrument until it indicates zero.

Remove weights in small amounts and after each weight is removed allow time for the automatic zero-setting device to function so as to see if the instrument is reset to zero automatically. Repeat this procedure until the instrument will not reset to zero automatically.

The maximum load that can be removed so that the instrument can still be reset to zero, is the zero-setting range.

If the load receptor cannot readily be removed, a practical approach can be to add weights to the instrument and use another zero-setting device, if provided, to set the instrument to zero. Then remove weights and check whether the automatic zero-setting still sets the instrument to zero. The maximum load that can be removed so that the instrument can still be reset to zero is the zero-setting range.

A.4.2.2 Zero indicating device (4.5.5)

For instruments with digital indication and without a zero-tracking device, adjust the instrument to about one scale interval below zero; then by adding weights equivalent to say 1/10 of the scale interval, determine the range over which the zero indicating device indicates the deviation from zero.

A.4.2.3 Accuracy of zero-setting (4.5.2)

A.4.2.3.1 Non-automatic and semi-automatic zero-setting

The accuracy of the zero-setting device is tested by first loading the instrument to an indication as close as possible to a changeover point, and then by initiating the zero-setting device and determining the additional load at which the indication changes from zero to one scale interval above zero. The error at zero is calculated according to the description in A.4.4.3.

A.4.2.3.2 Automatic zero-setting or zero-tracking

The indication is brought out of the automatic range (e.g. by loading with 10 e). Then the additional load at which the indication changes from one scale interval to the next above is determined and the error is calculated according to the description in A.4.4.3. It is assumed that the error at zero load would be equal to the error at the load in question.

A.4.3 Setting to zero before loading

For instruments with digital indication, the adjustment to zero, or the determination of the zero point is carried out as follows:

(a) for instruments with non-automatic zero-setting, weights equivalent to half a scale interval are placed on the load receptor, and the instrument is adjusted until the indication alternates between zero and one scale interval. Then weights equivalent to half a scale interval are removed from the load receptor to attain a center of zero reference position;

(b) for instruments with semi-automatic or automatic zero-setting or zero-tracking, the deviation from zero is determined as described in A.4.2.3.

A.4.4 Determination of weighing performance

A.4.4.1 Weighing test

Apply test loads from zero up to and including Max, and similarly remove the test loads back to zero. When determining the initial intrinsic error, at least 10 different test loads shall be selected, and for other weighing tests at least 5 shall be selected. The test loads selected shall include Max and Min, and values at or near those at which the maximum permissible error (mpe) changes.

It should be noted that when loading or unloading weights the load shall be progressively increased or progressively decreased.

If the instrument is provided with an automatic zero-setting or zero-tracking device, it may be in operation during the tests, except for the temperature test. The error at zero point is then determined

according to A.4.2.3.2.

A.4.4.2 Supplementary weighing test (4.5.1)

For instruments with an initial zero-setting device with a range greater than 20 % of Max, a supplementary weighing test shall be performed using the upper limit of the range as zero point.

A.4.4.3 Evaluation of error (A.4.1.6)

For instruments with digital indication and without a device for displaying the indication with a smaller scale interval (not greater than 1/5 e), the changeover points are to be used to determine the indication of the instrument, prior to rounding, as follows.

At a certain load, L, the indicated value, I, is noted. Additional weights of say 1/10 e are successively added until the indication of the instrument is increased unambiguously by one scale interval (I + e). The additional load ΔL added to the load receptor gives the indication P, prior to rounding by using the following formula:

$$P = I + 1/2\ e - \Delta L$$

The error prior to rounding is:

$$E = P - L = I + 1/2\ e - \Delta L - L$$

The corrected error prior to rounding is:

$$E_c = E - E_0 \leqq mpe$$

where E_0 is the error calculated at zero or at a load close to zero (e.g. 10 e).

Example: an instrument with a scale interval, e, of 5 g is loaded with 1 kg and thereby indicates 1 000 g. After adding successive weights of 0.5 g, the indication changes from 1 000 g to 1 005 g at an additional load of 1.5 g. Inserted in the above formula these observations give:

$$P = (1\ 000 + 2.5 - 1.5)\ g = 1\ 001\ g$$

Thus the true indication prior to rounding is 1 001 g, and the error is:

$$E = (1\ 001 - 1\ 000)\ g = +\ 1\ g$$

If the changeover point at zero as calculated above was $E_o = +\ 0.5$ g, the corrected error is:

$$E_c = +\ 1 - (+\ 0.5) = +\ 0.5\ g$$

In the tests A.4.2.3 and A.4.11.1, the error shall be determined with a sufficient accuracy in view of the tolerance in question.

Note: The above description and formulae are valid also for multi-interval instruments. Where the load L and the indication I are in different partial weighing ranges:

– the additional weights ΔL are to be in steps of 1/10 of e_i,

– in the equation "E = P – L = ⋯" above, the term "1/2 e" is to be 1/2 e_i or 1/2 e_{i+1} according to the partial weighing range in which the indication (I + e) is appearing.

A.4.4.4 Testing of modules

When testing modules separately, it shall be pos130sible to determine the errors with a sufficiently small uncertainty considering the chosen fractions of the mpe either by using a device for displaying the indication with a scale interval smaller than (1/5) . p_i . e or by evaluating the change-over point of the indication with an uncertainty better than (1/5) . p_i . e.

A.4.4.5 Weighing test using substitution material (3.7.3)

The test shall be carried out taking A.4.4.1 into account.

Check the repeatability error at a load of 50 % of Max and determine the allowed number of substitutions according to 3.7.3.

Apply test loads from zero up to and including maximum portion of standard weights.

Determine the error (A.4.4.3) and then remove the weights so that the no-load indication, or, in the case of an instrument with a zero-tracking device, the indication of say 10 e, is reached.

Substitute the previous weights with substitution material until the same changeover point, as used for the determination of the error, is reached. Repeat the above procedure until Max of the instrument is reached.

Unload in reverse order to zero, i.e. unload the weights and determine the changeover point. Place the weights back and remove the substitution material until the same changeover point is reached. Repeat this procedure until no-load indication.

Similar equivalent procedures may be applied.

A.4.5 Instrument with more than one indicating device (3.6.3)

If the instrument has more than one indicating device, the indications of the various devices shall be compared during the tests described in A.4.4.

A.4.6 Tare

A.4.6.1 Weighing test (3.5.3.3)

Weighing tests (loading and unloading according to A.4.4.1) shall be performed with at least two different tare values. At least 5 load steps shall be selected. The steps shall include values close to Min, the values at which the mpe changes and the value close to the maximum possible net load.

If the instrument is equipped with an additive tare device one of the weighing tests shall be performed with a tare value close to the maximum additive tare effect.

If the instrument is provided with automatic zero-setting or zero-tracking device it may be in operation during the test, in which case the error at zero point shall be determined according to A.4.2.3.2.

A.4.6.2 Accuracy of tare setting (4.6.3)

The accuracy of the tare device shall be established in a manner similar to the test described in A.4.2.3 with the indication set to zero using the tare device.

A.4.6.3 Tare weighing device (3.5.3.4 and 3.6.3)

If the instrument has a tare weighing device, the results obtained for the same load (tare), by the tare weighing device and the indicating device, shall be compared.

A.4.7 Eccentricity tests (3.6.2)

Large weights should be used in preference to several small weights. Smaller weights shall be placed on top of larger weights, but unnecessary stacking should be avoided within the segment to be tested. The load shall be applied centrally in the segment if a single weight is used, but applied uniformly over the segment, if several small weights are used.

The location of the load shall be marked on a sketch in the Test Report.

The error at each measurement is determined according to A.4.4.3. The zero error E_0 used for the correction is the value determined prior to each measurement.

If the instrument is provided with automatic zero-setting or zero-tracking, it shall not be in operation during the following tests.

A.4.7.1 Instrument with a load receptor having not more than four points of support

The four quarter segments roughly equal to 1/4 of the surface of the load receptor (as per the sketches in Figure 8 or similar sketches) shall be loaded in turn.

Figure 8

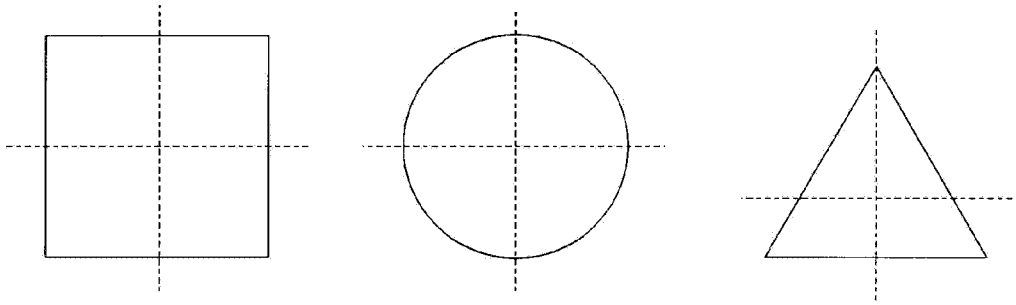

A.4.7.2 Instrument with a load receptor having more than four points of support

The load shall be applied over each support on an area of the same order of magnitude as the fraction 1/n of the surface area of the load receptor, where n is the number of points of support.

Where two points of support are too close together for the above-mentioned test load to be distributed as indicated above, the load shall be doubled and distributed over twice the area on both sides of the axis connecting the two points of support.

A.4.7.3 Instrument with special load receptors (tank, hopper, etc.)

The load shall be applied to each point of support.

A.4.7.4 Instrument used for weighing rolling loads (3.6.2.4)

A rolling load shall be applied at different positions on the load receptor. These positions shall be at the beginning, the middle and at the end of the load receptor in the normal driving direction. The positions shall then be repeated in the reverse direction.

A.4.8 Discrimination test (3.8)

The following tests shall be performed with three different loads, e.g. Min, 1/2 Max and Max.

A.4.8.1 Non-self-indication and analogue indication

An extra load shall be placed gently on or removed from the load receptor while the instrument is at equilibrium. For certain extra load the equilibrium mechanism shall assume a different position of equilibrium, as specified.

A.4.8.2 Digital indication

A load plus sufficient additional weights (say 10 times 1/10 d) shall be placed on the load receptor. The additional weights shall then be removed successively until the indication, I, is decreased unambiguously by one actual scale interval, I – d. One of the additional weights shall be replaced and a load equal to 1.4 d shall then be gently placed on the load receptor and give a result increased by one actual scale interval above the initial indication, I + d. See example in Figure 9.

Figure 9

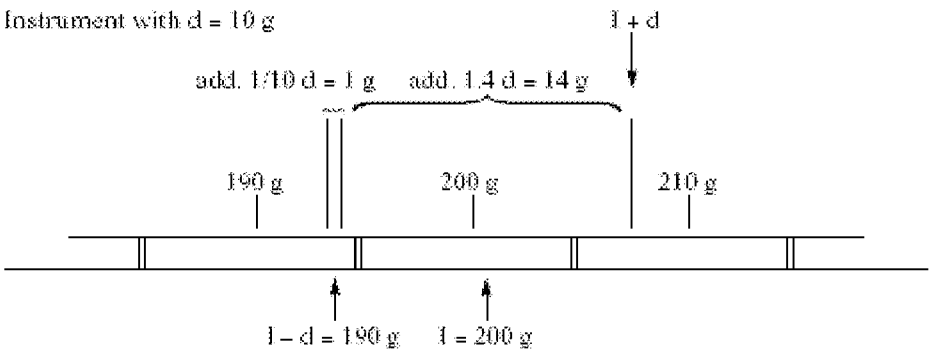

The indication at the start is I = 200 g. Remove additional weights until the indication changes to I – d = 190 g. Add 1/10 d = 1 g and thereafter 1.4 d = 14 g. The indication shall then be I + d = 210 g.

A.4.9 Sensitivity of a non-self-indicating instrument (6.1)

During this test the instrument shall oscillate normally, and an extra load equal to the value of the mpe for the applied load shall be placed on the instrument while the load receptor is still oscillating. For damped instruments the extra load shall be applied with a slight impact. The linear distance between the middle points of this reading and the reading without the extra load shall be taken as the permanent displacement of the indication. The test shall be performed with a minimum of two different loads (e.g. zero and Max).

A.4.10 Repeatability test (3.6.1)

Two series of weighings shall be performed, one with a load of about 50 % and one with a load close to 100 % of Max. For instruments with Max less than 1 000 kg each series shall consist of 10 weighings. In other cases each series shall consist of at least 3 weighings. Readings shall be taken when the instrument is loaded, and when the unloaded instrument has come to rest between weighings. In the case of a zero deviation between the weighings, the instrument shall be reset to zero, without determining the error at zero. The true zero position need not be determined between the weighings.

If the instrument is provided with automatic zero-setting or zero-tracking, it shall be in operation during the test.

A.4.11 Variation of indication with time (for instruments of class (II), (III) or (IIII) only)

A.4.11.1 Creep test (3.9.4.1)

Load the instrument close to Max. Take one reading as soon as the indication has stabilized and then note the indication while the load remains on the instrument for a period of four hours. During this test the temperature should not vary more than 2 °C.

The test may be terminated after 30 minutes if the indication differs less than 0.5 e during the first 30 minutes and the difference between 15 and 30 minutes is less than 0.2 e.

A.4.11.2 Zero return test (3.9.4.2)

The deviation in the zero indication before and after a period of loading with a load close to Max for half an hour, shall be determined. The reading shall be taken as soon as the indication has stabilized.

For multiple range instruments, continue to read the zero indication during the following 5 minutes after the indication has stabilized. If the instrument is provided with automatic zero-setting or zero-tracking, it shall not be in operation.

A.4.12 Test for the stability of equilibrium (4.4.2)

Load the instrument up to 50 % of Max or up to a load included in the range of operation of the relevant function. Manually disturb the equilibrium by one single action and initiate the command for printing, data storage, or other function, as soon as possible. In the case of printing or data storage, read the indicated value 5 seconds after printing. In the case of zero-setting or tare balancing, check the accuracy as per A.4.2.3/A.4.6.2. Perform the test 5 times.

A.5 Influence factors

A.5.1 Tilting

The instrument shall be tilted both forwards and backwards longitudinally, and from side to side, transversely.

In the text that follows, class (II) instruments intended for direct-sale to the public are designated class (II)* and class (II) instruments not intended for direct-sale to the public are designated class (II) .

In practice the tests (no-load and loaded) described in A.5.1.1.1 and A.5.1.1.2 can be combined as follows.

After zero-setting in the reference position, the indication (prior to rounding) is determined at no load and at the two test loads. The instrument is then unloaded and tilted (without a new zero-setting), after which

the indications at no load and at the two test loads are determined. This procedure is repeated for each of the tilting directions.

In order to determine the influence of tilting on the loaded instrument, the indication obtained at each tilt shall be corrected for the deviation from zero which the instrument had prior to loading.

If the instrument is provided with automatic zero-setting or zero-tracking, it shall not be in operation.

A.5.1.1 Tilting class (II), (III) or (IIII) instruments (3.9.1)

A.5.1.1.1 Tilting at no-load (class (II)*, (III) or (IIII))

The instrument shall be set to zero in its reference position (not tilted). The instrument shall then be tilted longitudinally up to 2/1000 or the limiting value of the level indicator, whichever is greater. The zero indication is noted. The test shall be repeated with transverse tilting.

A.5.1.1.2 Tilting when loaded (class (II), (II)*, (III) and (IIII))

The instrument shall be set to zero in its reference position and two weighings shall be carried out at a load close to the lowest load where the maximum permissible error changes, and at a load close to Max. The instrument is then unloaded and tilted longitudinally and set to zero. The tilting shall be 2/1000 or the limiting value of the level indicator, whichever is greater. Weighing tests as described above shall be performed. The test shall be repeated with transverse tilting.

A.5.1.2 Tilting class (I) instrument (3.9.1.2)

The instrument shall be tilted longitudinally up to the limiting value of the level indicator. Check the tilt. Repeat with transverse tilting.

If the tilt is not greater than 2/1000, no further testing is required. Otherwise test as per A.5.1.1.2.

A.5.1.3 Instrument without level indicator

For an instrument liable to be tilted and not fitted with a level indicator the tests in A.5.1.1 shall be performed except that the instrument shall be tilted 5 % instead of0.2 %.

A.5.2 Warm-up time test (5.3.5)

An instrument using electric power shall be disconnected from the supply for a period of at least 8 hours prior to the test. The instrument shall then be connected and switched on and as soon as the indication has stabilized, the instrument shall be set to zero and the error at zero shall be determined. Calculation of error shall be made according to A.4.4.3. The instrument shall be loaded with a load close to Max. These observations shall be repeated after 5, 15 and 30 minutes. Every individual measurement performed after 5, 15, and 30 minutes, shall be corrected for the zero error at that time.

For instruments of class (I), the provisions of the operating manual for the time following connection to the mains shall be observed.

A.5.3 Temperature tests

(see Figure 10 as a practical approach to performing the temperature tests)

A.5.3.1 Static temperatures (3.9.2.1 and 3.9.2.2)

The test consists of exposure of the equipment under test (EUT) to constant (*) temperatures within the range stated in 3.9.2, under free air conditions, for a 2 hour period after the EUT has reached temperature stability.

The weighing tests (loading and unloading) shall be carried out according to A.4.4.1:

– at a reference temperature (normally 20 °C but for class (I) instruments the mean value of the specified temperature limits),

– at the specified high temperature,

– at the specified low temperature,

– at a temperature of 5 °C, if the specified low temperature is below 10 °C, and

– at the reference temperature.

The change of temperature shall not exceed 1 °C/min during heating and cooling down.

For class (I) instruments, changes in barometric pressure shall be taken into account.

The absolute humidity of the test atmosphere shall not exceed 20 g/m^3, unless the operating manual gives different specifications.

Reference to IEC Publications: see Bibliography /1/ (**)

(*) See A.4.1.2.

(**) See preliminary note to Annex B.

A.5.3.2 Temperature effect on the no-load indication (3.9.2.3)

The instrument shall be set to zero and then changed to the prescribed highest and lowest temperatures as well as at 5 °C if applicable. After stabilisation the error of the zero indication shall be determined. The change in zero indication per 1 °C (class instruments) or per 5 °C (other instruments) shall be calculated. The changes of these errors per 1 °C (class (I) instruments) or per 5 °C (other instruments) shall be calculated for any two consecutive temperatures of this test.

This test may be performed together with the temperature test (A.5.3.1). The errors at zero shall then be additionnally determined immediately before changing to the next temperature and after the 2 hour period after the instrument has reached stability at this temperature.

Note: Preloading is not allowed before these measurements.

If the instrument is provided with automatic zero-setting or zero-tracking, it shall not be in operation.

A.5.4 Voltage variations (3.9.3)

Stabilize the EUT under constant environmental conditions. The test consists of subjecting the EUT to variations of AC mains voltage.

The test shall be performed with test loads of 10 e and a load between 1/2 Max and Max.

Test severity: Voltage variations: upper limit V + 10 %

lower limit V – 15 %

where V is the value marked on the instrument; if a range of voltages (Vmin, Vmax) is marked then the test shall be performed at Vmax + 10 % and Vmin – 15 %.

Maximum allowable variations: All functions shall operate as designed.

All indications shall be within the maximum permissible errors.

Note: Where an instrument is powered by a three phase supply, the voltage variations shall apply for each phase successively.

If the instrument is provided with an automatic zero-setting device or a zero-tracking device, it may be in operation during the test, in which case the error at zero point shall be determined according to A.4.2.3.2.

A.6 Endurance test (3.9.4.3)

(applicable only to instruments of class (II), (III) and (IIII) with Max ≦ 100 kg)

The endurance test shall be performed after all other tests.

Under normal conditions of use, the instrument shall be subjected to the repetitive loading and unloading of a load approximately equal to 50 % of Max. The load shall be applied 100 000 times. The frequency and speed of application shall be such that the instrument attains an equilibrium when loaded and when unloaded. The force of the load applied shall not exceed the force attained in a normal loading operation.

A weighing test in accordance with the procedure in A.4.4.1 shall be performed before the endurance test is started to obtain the intrinsic error. A weighing test shall be performed after the completion of the loadings to determine the durability error due to wear and tear.

If the instrument is provided with automatic zero-setting or zero-tracking device it may be in operation during the test, in which case the error at zero point shall be determined according to A.4.2.3.2.

Figure 10
Proposed test sequence for test A.5.3.1 combined with A.5.3.2
(temperature test where the temperature limits are + 40 °C / – 10 °C)

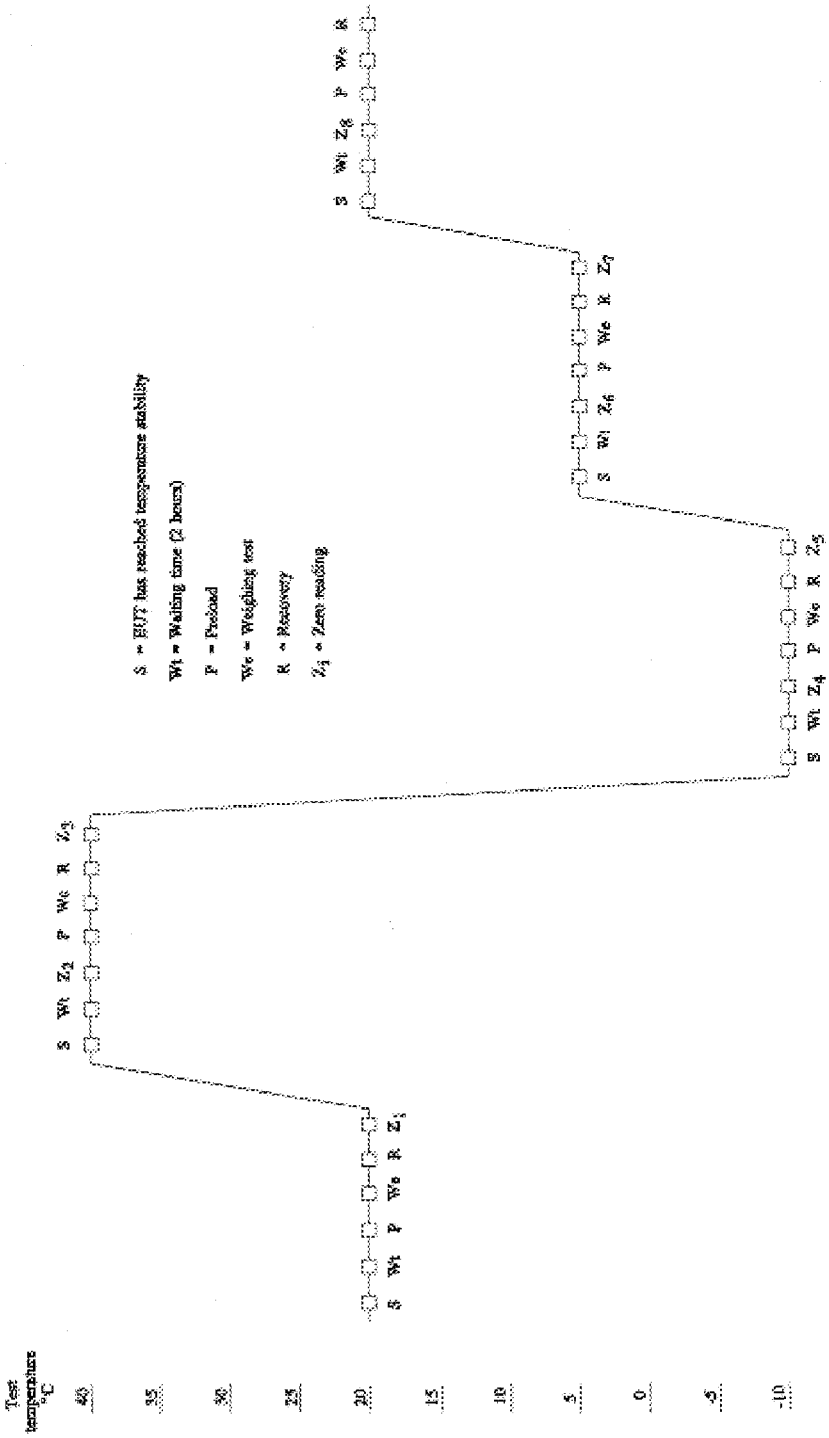

ANNEX B

(mandatory)

ADDITIONAL TESTS FOR ELECTRONIC INSTRUMENTS

Preliminary note: The tests which are specific to electronic instruments, as described in this Annex, have been taken as far as possible from the work of the International Electrotechnical Commission (IEC).

B.1 General requirements for electronic instruments under test (EUT)

Energize the EUT for a time period equal to or greater than the warm-up time specified by the manufacturer and maintain the EUT energized for the duration of the test.

Adjust the EUT as closely as practicable to zero prior to each test, and do not readjust it at any time during the test, except to reset it if a significant fault has been indicated. The deviation of the no-load indication due to any test condition shall be recorded, and any load indication shall be corrected accordingly to obtain the weighing result.

The handling of the instrument shall be such that no condensation of water occurs on the instrument.

B.2 Performance tests for influence factors

B.2.1 Static temperatures: see A.5.3.

B.2.2 Damp heat, steady state (not applicable to class (I) instruments or class (II) instruments where e is less than 1 gram)

Test procedure in brief: The test consists of exposure of the EUT to a constant (*) temperature and a constant relative humidity. The EUT shall be tested with at least five different test loads (or simulated loads):

– at the reference temperature (20 °C or the mean value of the temperature range whenever 20 °C is outside this range) and a relative humidity of 50 % following conditioning,

– at the high temperature of the range specified in 3.9.2 and a relative humidity of 85 %, two days following temperature and humidity stabilization, and

– at the reference temperature and relative humidity of 50 %.

Maximum allowable variations: All functions shall operate as designed.

All indications shall be within maximum permissible errors.

Reference to IEC Publications: see Bibliography /2/

(*) See A.4.1.2.

B.2.3 Power voltage variations: see A.5.4.

B.3 Performance tests for disturbances

Prior to any test, the rounding error shall be set as close as possible to zero.

If there are interfaces on the instrument, an appropriate peripheral device shall be connected to each different type of interface during the tests.

B.3.1 Short time power reductions

Test procedure in brief: Stabilize the EUT under constant environmental conditions.

A test generator capable of reducing the amplitude of one or more half cycles (at zero crossings) of the AC mains voltage shall be used. The test generator shall be adjusted before connecting the EUT. The mains voltage reductions shall be repeated ten times with an interval of at least 10 seconds.

The test shall be performed with one small test load.

Test severity:	Reduction	100 %	50 %
	Number of half cycles	1	2

Maximum allowable variations: The difference between the weight indication due to the disturbance and the indication without the disturbance shall either not exceed e or the instrument shall detect and react to a significant fault.

B.3.2 Bursts

The test consists in exposing the EUT to specified bursts of voltage spikes.

Test instrumentation: See IEC 61000-4-4 (1995)

Test set-up: See IEC 61000-4-4 (1995)

Test procedure: See IEC 61000-4-4 (1995)

Before any test stabilize the EUT under constant environmental conditions.

The test shall be applied separately to:

– power supply lines,

– I/O circuits and communication lines, if any.

The test shall be performed with one small test load.

Test severity: Level 2 (see IEC 801-4 (1988), N° 5) Open circuit output test voltage for:

– power supply lines: 1 kV,

– I/O signal, data and control lines: 0.5 kV.

Maximum allowable variations: The difference between the weight indication due to the disturbance and the indication without the disturbance shall either not exceed e or the instrument shall detect and react to a significant fault.

Reference to IEC Publications: see Bibliography /3/

B.3.3 Electrostatic discharge

The test consists in exposing the EUT to specified, direct and indirect, electrostatic discharges.

Test generator: See IEC 61000-4-2 (1995)

Test set-up: See IEC 61000-4-2 (1995)

Test procedure: See IEC 61000-4-2 (1995)

This test includes the paint penetration method, if appropriate. For direct discharges the air discharge shall be used where the contact discharge method cannot be applied.

Before any test stabilize the EUT under constant environmental conditions.

At least 10 direct discharges and 10 indirect discharges shall be applied. The time interval between successive discharges shall be at least 10 seconds.

The test shall be performed with one small test load.

Test severity: Level 3 (see IEC 801-2 (1991), N° 5)

DC voltage up to and including 6 kV for contact discharges and 8 kV for air

discharges.

Maximum allowable variations: The difference between the weight indication due to the disturbance and the indication without the disturbance shall either not exceed e or the instrument shall detect and react to a significant fault.

Reference to IEC Publications: see Bibliography /4/

B.3.4 Immunity to radiated electromagnetic fields

Note: At the time of printing this Recommendation the IEC Publication 801-3 is still being revised (latest draft: 65A/77B (Secretariat) 121/88 dated July 1991). When performing this test, metrology authorities shall refer to the final text of IEC 801-3 when available, and before that to the most recent draft. A corrigendum to this Recommendation will be issued as soon as the final text of IEC 801-3 is available.

The test consists in exposing the EUT to specified electromagnetic fields.

Test equipment: See IEC 61000-4-3 (1995)

Test set-up: See IEC61000-4-3 (1995)

Test procedure: See IEC61000-4-3 (1995)

Before any test, stabilize the EUT under constant environmental conditions.

The EUT shall be exposed to electromagnetic fields of the strength and character as specified by the severity level.

The test shall be performed with one small test load only.

Test severity: Level 2 (see IEC 61000-4-3 (1995))

Frequency range :	26 - 1 000	MHz
Field strength :	3	V/m
Modulation :	80 % AM, 1 kHz sine wave	

Maximum allowable variations: The difference between the weight indication due to the disturbance and the indication without the disturbance either shall not exceed e or the instrument shall detect and react to a significant fault.

Reference to IEC Publications: see Bibliography /5/

B.4 Span stability test

(not applicable to class (I) instruments)

test procedure in brief: The test consist in observing the variations of the error of the EUT under sufficiently constant ambient conditions (reasonably constant conditions in a normal laboratory environment) at various intervals before, during and after the EUT has been subjected to performance tests.

The performance tests shall include the temperature test and, if applicable, the damp heat test; they shall not include any endurance test; other performance tests in Annexes A and B may be performed.

The EUT shall be disconnected from the mains power supply, or battery supply where fitted, two times for at least 8 hours during the period of the test. The number of disconnections may be increased if the manufacturer specifies so or at the discretion of the approval authority in the absence of any such specification.

For the conduct of this test the manufacturer's operating instructions shall be considered.

The EUT shall be stabilized at sufficiently constant ambient conditions after switch-on for at least 5 hours, but at least 16 hours after the temperature and damp heat tests have been performed.

Test duration: 28 days or the period necessary for the performance tests to be carried out, whichever is shorter.

Time between measurements: Between 1/2 and 10 days, with a fairly even distribution of the measurements over the total duration of the test.

Test load: Near Max; the same test weights shall be used through out this test.

Number of measurements: At least 8.

Test sequence: Stabilize all factors at sufficiently constant ambient conditions.

Adjust the EUT as close to zero as possible.

Automatic zero-tracking shall be made inoperative and automatic built-in span adjustment device shall be made operative.

Apply the test weight(s) and determine the error.

At the first measurement immediately repeat zeroing and loading four times to determine the average value of the error. For the next measurements perform only one, unless either the result is outside the specified tolerance or the range of the five readings of the initial measurement is more than 0.1 e.

Record the following data:

(a) date and time,

(b) temperature,

(c) barometric pressure,

(d) relative humidity,

(e) test load,

(f) indication,

(g) errors,

(h) changes in test location,

and apply all necessary corrections resulting from variations of temperature, pressure, etc. between the various measurements.

Allow full recovery of the EUT before any other tests are performed.

Maximum allowable variations: The variation in the errors of indication shall not exceed half the verification scale interval or half the absolute value of the maximum permissible error on initial verification for the test load applied, whichever is greater, on any of the n measurements.

Where the differences of the results indicate a trend more than half the allowable variation specified above, the test shall be continued until the trend comes to rest or reverses itself, or until the error exceeds the maximum allowable variation.

BIBLIOGRAPHY

References are given below to Publications of the International Electrotechnical Commission, IEC, of which mention is made in some of the tests in Annexes A and B.

/1/ IEC Publication 60068-2-1 (1990): Basic environmental testing procedures, Part 2: Tests, Test Ad: Cold, for heat dissipating equipment under test (EUT), with gradual change of temperature.

IEC Publication 60068-2-2 (1974): Basic environmental testing procedures, Part 2: Tests, Test Ad: Dry heat, for heat dissipating equipment under test (EUT), with gradual change of temperature.

IEC Publication 60068-3-1 (1974): Background information, Section 1: Cold and dry heat tests.

/2/ IEC Publication 60068-2-78 (2001): Basic environmental testing procedures, Part 2: Tests, Test Ca: Damp heat, steady state.

IEC Publication 60068-3-4 (2001): Guidance for damp heat tests.

/3/ IEC Publication 61000-4-4 (1995): Electromagnetic compatibility for industrial-process measurement and control equipment, Part 4: Electrical fast transients requirements.

/4/ IEC Publication 61000-4-2 (1995): Electromagnetic compatibility for industrial-process measurement and control equipment, Part 2: Electrostatic discharge requirements.

/5/ IEC Publication 61000-4-3 (1995): Electromagnetic compatibility for industrial-process measurement and control equipment, Part 3: Radiated electromagnetic field requirements.

Ⅳ Test report

The " Test report " aims at presenting, in a standardized format, the results of the various tests to which a pattern of a nonautomatic weighing instrument shall be submitted with a view to its approval. These tests are described in Annexes A and B.

The "information concerning the test equipment used for pattern evaluation" shall cover all test equipment which has been used in determining the test results given in a report. The information may be a short list containing only essential data (name, type, reference number for purpose of traceability). For example:

-Verification standards (accuracy, or accuracy class, and N°)

-Simulator for testing of modules (name, type, traceability and N°)

-Climatic test and static temperature chamber (name, type and N°)

-Electrical tests, bursts (name of the instrument, type and N°)

-Description of the procedure of field calibration for the test of immunity to radiated electromagnetic fields

Note concerning the numbering of the pages

At the bottom of the pages of this publication, a special place is left at the top of each page (starting with the following page) for numbering the pages of reports established following this model; in particular, some tests (e.g. weighing performance) shall be repeated several times, each test being reported individually on a separate page following the relevant format; in the same way, a multiple range instrument shall be tested separately for each range and a separate form (including the general information form) shall be filled out for each range. For a given report, it is advisable to complete the sequential numbering of each page by the indication of the total number of pages of the report.

TEST REPORT

EXPLANATORY NOTES

Meaning of symbols:

I = Indication

In = n^{th} indication

L = Load

Δ L = Additional load to next changeover point

P = I + 1/2 e)) Δ L = Indication prior to rounding (digital indication)

E = I - L or P - L = Error

mpe = Maximum permissible error (absolute value)

EUT = Equipment under test

The name(s) or symbol(s) of the unit(s) used to express test results shall be specified in each form.

For each test, the "SUMMARY OF PATTERN EVALUATION" and the "CHECKLIST" shall be completed according to this example:

	PASSED	FAILED
when the instrument has passed the test:	**X**	
when the instrument has failed the test:		**X**
when the test is not applicable:		

The white spaces in boxes in the headings of the report should always be filled in according to the following example:

	At start	At max	At end	
Temp:	20.5		21.2	℃
Rel. h:				%
Time:				
Bar. pres:				hPa

The barometric pressure is necessary for the span stability test and when specified by IEC test provisions; in other cases it may be necessary only for class (I) instruments.

"Date" in the test reports refers to the date that the test was performed.

In the disturbance tests (12.1 through 12.4), faults greater than e are acceptable provided that they are detected and acted upon, or that they result from circumstances such that these faults shall not be considered as significant (see T.5.5.6); an appropriate explanation shall be given in the column "Yes (remarks)".

Numbers in brackets refer to the corresponding subclauses of CNPA 76.

GENERAL INFORMATION CONCERNING THE PATTERN

Application N°: ----------
Pattern designation: ----------
Manufacturer: ----------
Applicant: ----------
Instrument category: ----------

☐ Complete instrument ☐ Module(*)

Accuracy class: ☐ (I) ☐ (II) ☐ (III) ☐ (IIII)

☐ Self-indicating ☐ Semi-self-indicating ☐ Non-self-indicating

Min = ☐

e = ☐ Max = ☐ d = ☐ n = ☐

e_1 = ☐	Max_1 = ☐	d_1 = ☐	n_1 = ☐
e_2 = ☐	Max_2 = ☐	d_2 = ☐	n_2 = ☐
e_3 = ☐	Max_3 = ☐	d_3 = ☐	n_3 = ☐

T = + ☐ T = – ☐

U_n = ☐ V U_{min}= ☐ V U_{max} = ☐ V f = ☐ Hz Battery, U = ☐ V

Zero-setting device:

☐ Non-automatic
☐ Semi-automatic
☐ Automatic zero setting
☐ Initial zero setting
☐ Zero tracking

Tare device:

☐ Tare balancing
☐ Tare weighing
☐ Preset tare device
☐ Subtractive tare
☐ Additive tare

☐ Combined zero/tare device

Initial zero-setting range = ☐ % Temperature range: ☐ °C

Printer: ☐ Built-in ☐ Connected ☐ Non-present but connectable ☐ No connection

Instrument submitted: ----------
Identification N°: ----------
Connected equipment: ----------

Interfaces: ----------
(number, nature) ----------
Remarks: see following page
Date of report: ----------
Observer: ----------

Load cell:
Manufacturer: ----------
Type: ----------
Capacity: ----------
Number: ----------
Classification symbol: ----------
Evaluation period: ----------

(*) The test equipment (simulator or a part of a complete instrument) connected to the module shall be defined in the test form(s) used.

GENERAL INFORMATION CONCERNING THE PATTERN
(continued)

Use this space to indicate additional remarks and/or information: connections equipment, interfaces and load cells, choice of the manufacturer regarding protection against disturbances (5.1.1.a or 5.1.1.b), instruments with the use of auxiliary units of measurement(9.1), price computing weighing instruments with special applications, etc.

INFORMATION CONCERNING THE TEST EQUIPMENT
USED FOR PATTERN EVALUATION

SUMMARY OF PATTERN EVALUATION

Application N° .....

Pattern designation: .....

	TESTS		Report page	PASSED	FAILED	Remarks
1	Weighing performance Initial °C °C °C °C °C °C					
2	Temperature effect on no-load indication					
3.1	Eccentricity using weights					
3.2	Eccentricity using a rolling load					
4.1	Discrimination					
4.2	Sensitivity					
5	Repeatability					
6.1	Zero return					
6.2	Creep					
7	Stability of equilibrium					
8	Tilting					
9	Tare					
10	Warm-up time					
11	Voltage variations					
12.1	Short time power reductions					
12.2	Electrical bursts	a) Power supply lines				
		b) I/O circuits and communication lines				
12.3	Electrostatic discharges	a) Direct application				
		b) Indirect application (contact discharges only)				
12.4	Immunity to radiated electromagnetic fields					
13	Damp heat, steady state	a) Initial test (at reference temperature)				
		b) Test at high temperature and 85 % relative humidity				
		c) Final test (at reference temperature)				
14	Span stability					
15	Endurance	a) Initial test				
		c) Final test				
	EXAMINATIONS					
16	Examination of the construction					
17	Checklist					

1 WEIGHING PERFORMANCE (A.4.4)(A.5.3.1)

(Calculation of the error)

Application N° ----------

Pattern designation: ----------

Date: ----------

Observer: ----------

Verification scale interval e: ----------

Resolution during test (smaller than e): ----------

	At start	At max	At end	
Temp:				℃
Rel. h:				%
Time:				
Bar. pres:				hPa

(only class I)

Automatic zero-setting and zero-tracking device is:

☐ Non-existent ☐ Not in operation ☐ Out of working range ☐ In operation

Initial zero-setting > 20% of Max: ☐ Yes ☐ No (see CNPA76, A.4.4.2)

$E = I + 1/2\,e - \Delta L - L$

$E_c = E - E_0$ with E_0 = error calculated at or near zero(*)

Load L	Indication I		Add. load ΔL		Error E		Corrected error Ec		mpe
	↓	↑	↓	↑	↓	↑	↓	↑	
(*)					(*)				

☐ Passed ☐ Failed

Remarks:

2 TEMPERATURE EFFECT ON NO-LOAD INDICATION(A.5.3.2)

Application N° ----------

Pattern designation: ----------

Date: ----------

Observer: ----------

Verification scale interval e: ----------

Resolution during test (smaller than e): ----------

Automatic zero-setting and zero-tracking device is:

☐ Non-existent ☐ Not in operation ☐ Out of working range ☐ In operation

P＝I＋1/2 e－Δ L

Report page (*)	Date	Time	Temp (℃)	Zero indication I	Add. load Δ L	P	Δ P	Δ Temp	Zero-change per…℃

Δ P ＝ difference of P for two consecutive tests at different temperatures

Δ Temp ＝ difference of Temp for two consecutive tests at different temperatures

Check if the zero-change per 5 ℃ is smaller than e (class (II)、(III)、(IIII))

Check if the zero-change per 1 ℃ is smaller than e ((I))

☐ Passed ☐ Failed

Remark：

(*) Give the report page of the relevant weighing test where weighing tests and temperature effect on no-load indication test are conducted together.

3 ECCENTRICITY (A.4.7)

3.1 Eccentricity using weights (A.4.7.1, 2 and 3)

Application N° ----------

Pattern designation: ----------

Date: ----------

Observer: ----------

Verification scale interval e: ----------

Resolution during test (smaller than e): ----------

	At start	At max	At end	
Temp:				℃
Rel. h:				%
Time:				
Bar. pres:				hPa

(only class I)

Location of test loads: mark on a sketch (see an example below) the successive locations of test loads, using numbers which shall be repeated in the table below.

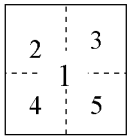

Also indicate in the sketch the location of the display or of another perceptible part of the instrument.

Automatic zero-setting and zero-tracking device is:

☐ Non-existent ☐ Not in operation ☐ Out of working range

$E = I + 1/2\,e - \Delta L - L$

$E_c = E - E_0$ with E_0 = error calculated at or near zero(*)

Load L	Location	Indication I	Add. Load ΔL	Error E	Corrected error E_c	mpe
(*)				(*)		

☐ Passed ☐ Failed

Remarks：

3.2 Eccentricity using a rolling load (A.4.7.4)

Application N° ----------

Pattern designation: ----------

Date: ----------

Observer: ----------

Verification scale interval e: ----------

Resolution during test (smaller than e): ----------

	At start	At max	At end	
Temp:				℃
Rel. h:				%
Time:				
Bar. pres:				hPa

(only class Ⅰ)

Location of test loads: mark on a sketch (see an example below) the successive locations of test loads, using numbers which shall be repeated in the table below.

1	2	3

Also indicate in the sketch the location of the display or of another perceptible part of the instrument.

Automatic zero-setting and zero-tracking device is:

☐ Non-existent ☐ Not in operation ☐ Out of working range

$E = I + 1/2\ e - \Delta L - L$

$E_c = E - E_0$ with E_0 = error calculated at or near zero(*)

Load L	Location	Indication I	Add. Load ΔL	Error E	Corrected error E_c	mpe
(*)				(*)		

☐ Passed ☐ Failed

Remarks：

4 DISCRIMINATION AND SENSITIVITY

4.1 Discrimination

4.1.1 Digital indication (A.4.8.2)

Application N° ----------

Pattern designation: ----------

Date: ----------

Observer: ----------

	At start	At max	At end	
Temp:				℃
Rel. h:				%
Time:				
Bar. pres:				hPa

Load	Indication I_1	Remove load ΔL	Add 1/10d	Extra load = 1.4d	Indication I_2	$I_2 - I_1$

Check if $I_2 - I_1 = d$

☐ Passed ☐ Failed

Remarks：

4.1.2Analogue indication (A.4.8.1)

Application N° ----------

Pattern designation: ----------

Date: ----------

Observer: ----------

	At start	At max	At end	
Temp:				℃
Rel. h:				%
Time:				
Bar. pres:				hPa

Load L	Indication I_1	Extra load = |mpe|	Indication I_2	$I_2 - I_1$

Check if $I_2 - I_1 \geqq 0.7$ mpe

☐ Passed ☐ Failed

Remarks：

4.1.3 Non-self-indicating instrument (A.4.8.1)

Application N° ----------

Pattern designation: ----------

Date: ----------

Observer: ----------

	At start	At max	At end	
Temp:				℃
Rel. h:				%
Time:				
Bar. pres:				hPa

LoadL	Indication I	Extra load = 0.4|mpe|	Movement (*)

(*) Mark visible movement by "+"

☐ Passed ☐ Failed

Remarks：

4.2 Sensitivity (non-self-indicating instrument) (A.4.9)

Application N° ----------

Pattern designation: ----------

Date: ----------

Observer: ----------

	At start	At max	At end	
Temp:				℃
Rel. h:				%
Time:				
Bar. pres:				hPa

Load L	Extra load = |mpe|	Displacement of indicating element	Requirement

☐ Passed ☐ Failed

Remarks：

5 REPEATABILITY (A.4.10)

Application N° ----------

Pattern designation: ----------

Date: ----------

Observer: ----------

Verification scale interval e: ----------

Resolution during test (smaller than e): ----------

	At start	At max	At end	
Temp:				℃
Rel. h:				%
Time:				
Bar. pres:				hPa

(only class Ⅰ)

Automatic zero-setting and zero-tracking device is:

☐ Non-existent ☐ Not in operation

Load(weighing1-10) ☐ Load(weighing 11-20) ☐

P＝I＋1/2 e－ΔL

	Indication of load I	Add. load ΔL	P
1			
2			
3			
4			
5			
6			
7			
8			
9			
10			

	Indication of load I	Add. load ΔL	P
11			
12			
13			
14			
15			
16			
17			
18			
19			
20			

P_{max} － P_{min} (weighing 1-10) ☐

mpe ☐

P_{max} － P_{min} (weighing 11-20) ☐

mpe ☐

☐ Passed ☐ Failed

Remarks：

6 TIME-DEPENDENCE

6.1 Zero return (A.4.11.2)

Application N° ----------

Pattern designation: ----------

Date: ----------

Observer: ----------

Verification scale interval e: ----------

Resolution during test (smaller than e): ----------

	At start	At max	At end	
Temp:				℃
Rel. h:				%
Time:				
Bar. pres:				hPa

(only class Ⅰ)

Automatic zero-setting and zero-tracking device is:

☐ Non-existent ☐ Not in operation ☐ Out of working range

$P = I + 1/2\ e - \Delta L$

Time of reading	Load L_0	Indication of zero I_0	Add. load ΔL	P
After loading for 0.5 h Load=				

Change of zero indication

$|\Delta P| =$ ☐

Check if $|\Delta P| \leqq 0.5\ e$

☐ Passed ☐ Failed

Remarks：

6.2 Creep (A.4.11.1)

Application N° ----------

Pattern designation: ----------

Date: ----------

Observer: ----------

Verification scale interval e: ----------

Resolution during test (smaller than e): ----------

	At start	At max	At end	
Temp:				℃
Rel. h:				%
Time:				
Bar. pres:				hPa

(only class Ⅰ)

P＝I＋1/2 e－ΔL

Time of reading		Load L	Indication I	Add. load ΔL	P	ΔP
	0 min					
	5 min					
	15 min					
	30 min					

(*)

	1 h					
	2 h					
	3 h					
	4 h					

ΔP＝difference between P at the start (0 min) and P at a given time.

(*) If $|\Delta P| \leq 0.5$ e e during the first 30 min and if the variation of *)P* between 15 min and 30 min ≤ 0.2 e, then the test is terminated. If not, the test shall continue for the next 3.5 hours. Check that during the total 4 hours: $|\Delta P| \leq$ mpe

☐ Passed ☐ Failed

Remarks：

7 STABILITY OF EQUILIBRIUM (A.4.12)

Application N° ----------

Pattern designation: ----------

Date: ----------

Observer: ----------

	At start	At max	At end	
Temp:				℃
Rel. h:				%
Time:				
Bar. pres:				hPa

In the case of printing or data storage

Load= [ ]

N°	First printed or stored value after disturbance and command	Reading during 5 s after print-out or storage	
		Minimum	Maximum
1			
2			
3			
4			
5			

Check if only two adjacent figures appear, one being the printed value Passed Failed

☐ Passed ☐ Failed

Remarks：

In the case of zero-setting or tare balancing

$E_0 = I + 1/2\ e - \Delta L - L_0$ $L_0 = 0$ or near zero

N°	LoadL_0	IndicationI_0	Add. load ΔL	Error E_0
Zero setting				
1				
2				
3				
4				
5				
Tare balancing				
6				
7				
8				
9				
10				

Check the accuracy according to 4.5.2 for zero setting and to 4.5.3 for tare balancing

☐ Passed ☐ Failed

Remarks：

8 TILTING (A.5.1, 2 and 3)

Application N° ----------

Pattern designation: ----------

Date: ----------

Observer: ----------

Verification scale interval e: ----------

Resolution during test (smaller than e): ----------

	At start	At max	At end	
Temp:				℃
Rel. h:				%
Time:				
Bar. pres:				hPa

(only class Ⅰ)

☐ Tilting 0.2 % (class Ⅱ、Ⅲ or Ⅲ)

☐ Tilting to the limiting value of level indicator (class Ⅰ、Ⅱ、Ⅲ or Ⅲ)

☐ Tilting to the limiting value of level indicator (class Ⅰ) only) if the tilting is not greater than 0.2 %, in which case the test shall not be performed.

☐ Tilting 5 % if no level indicator on instrument liable to be tilted

Give (if appropriate on a separate sheet) a sketch of the load receptor showing the location of the level indicator, if provided.

Automatic zero-setting and zero-tracking device is:

☐ Non-existent ☐ Not in operation ☐ Out of working range

$P_v = I_v + 1/2\,e - \Delta L_v$ (v = 1、2、3、4、5)

P_v^0 is the indication .P_v corrected for the deviation from zero the instrument had prior to loading.

Load L	I_1	ΔL_1	I_2	ΔL_2	I_3	ΔL_3	I_4	ΔL_4	I_5	ΔL_5	$\lvert P_1 - P_v \rvert_{max}$ 或 $\lvert P_1^0 - P_v^0 \rvert_{max}$
Unloaded(*)											
											(≦2e)
P_V →											
Loaded										2e=	
											(≦mpe)
P_V →											
P^0 →											
											(≦mpe)
P_V →											
P^0 →											
											mpe=

☐ Passed ☐ Failed

Remarks：

9 TARE (WEIGHING TEST) (A.4.6.1)

Application N° ----------
Pattern designation: ----------
Date: ----------
Observer: ----------
Verification scale interval e: ----------
Resolution during test (smaller than e): ----------

Automatic zero-setting and zero-tracking device is:

☐ Non-existent ☐ Not in operation ☐ Out of working range ☐ In operation

First tare value

Tare： ☐

Tare indication： ☐

	At start	At max	At end	
Temp:				℃
Rel. h:				%
Time:				
Bar. pres:				hPa

(only class I)

$E = I + 1/2\ e - \Delta L - L$

$E_c = E - E_0$ with E_0 = error calculated at or near zero(*)

Load	Indication I		Add. load ΔL		Error E		Corrected error E_c		mpe
	↓	↑	↓	↑	↓	↑	↓	↑	
(*)					(*)				

TARE (WEIGHING TEST) (cont.)

Second tare value

Tare：

Tare indication：

	At start	At max	At end	
Temp:				℃
Rel. h:				%
Time:				
Bar. pres:				hPa

(only class Ⓘ)

$E = I + 1/2\ e - \Delta L - L$

$E_c = E - E_0$ with E_0 = error calculated at or near zero(*)

Load	Indication I		Add. load ΔL		Error E		Corrected error E_c		mpe
	↓	↑	↓	↑	↓	↑	↓	↑	
(*)					(*)				

☐ Passed ☐ Failed

Remarks：

10 WARM-UP TIME(A.5.2)

Application N° ----------

Pattern designation: ----------

Date: ----------

Observer: ----------

Verification scale interval e: ----------

Resolution during test (smaller than e): ----------

Duration of disconnection before test: ----------

	At start	At max	At end	
Temp:				℃
Rel. h:				%
Time:				
Bar. pres:				hPa

(only class Ⓘ)

Automatic zero-setting and zero-tracking device is:

☐ Non-existent ☐ Not in operation ☐ Out of working range ☐ In operation

$E = I + 1/2\,e - \Delta L - L$

E_0 = error calculated prior to each measurement at or near zero

E_L = error calculated at load (loaded)

	time(*)	Load L(kg)	Indication I (kg)	Add. Load ΔL	Error E	$E_L - E_0$	mpe=
Unloaded	0 min						
Loaded							
Unloaded	5 min						
Loaded							
Unloaded	15 min						
Loaded							
Unloaded	30 min						
Loaded							

(*) Counted from the moment an indication has first appeared. Check that $|E_L - E_0| \leq$ mpe

☐ Passed ☐ Failed

Remarks：

11 VARIATIONS OF VOLTAGE (A.5.4)

Application N° ----------

Pattern designation: ----------

Date: ----------

Observer: ----------

Verification scale interval e: ----------

Resolution during test (smaller than e): ----------

	At start	At max	At end	
Temp:				℃
Rel. h:				%
Time:				
Bar. pres:				hPa

(only class (I))

Automatic zero-setting and zero-tracking device is:

☐ Non-existent ☐ Not in operation ☐ Out of working range ☐ In operation

Marked nominal voltage or voltage range: ☐ **V**

$E = I + 1/2\,e - \Delta L - L$

$E_c = E - E_0$ with E_0 = error at zero or near zero(*)

Voltage	U (V)	Load L	Indication I	Add. load ΔL	Error E	Corrected error E_c	mpe
Reference value (**)							
Reference value −15%(**)							
Reference value +10%(**)							
Reference value (**)							

☐ Passed ☐ Failed

Remarks：

(**)In case a voltage-range is marked, use the average value as reference value and calculate upper and lower values of applied voltages according to A.5.4.

12 ELECTRICAL DISTURBANCES

12.1 Short time power reductions (B.3.1)

Application N° ----------

Pattern designation: ----------

Date: ----------

Observer: ----------

Verification scale interval e: ----------

Resolution during test (smaller than e): ----------

	At start	At max	At end	
Temp:				℃
Rel. h:				%
Time:				
Bar. pres:				hPa

(only class I)

Marked nominal voltage U_n or voltage range: ____ **V**

Load	Disturbance				Result		
	Amplitude (*) % of U_n	Duration cycles	Number of disturbances	Repetition interval(s)	Indication I	Significant fault (>e) No	Yes(remarks)
	without disturbance						
	0	0.5	10				
	50	1	10				

☐ Passed ☐ Failed

Remarks：

12.2 Electrical bursts (B.3.2)

a) Power supply lines

Application N° ----------

Pattern designation: ----------

Date: ----------

Observer: ----------

Verification scale interval e: ----------

Resolution during test (smaller than e): ----------

	At start	At max	At end	
Temp:				℃
Rel. h:				%
Time:				
Bar. pres:				hPa

(only class I)

Power supply lines: test voltage 1 kV, duration of the test 1 min at each polarity

Small test load	Connection			Polarity	Result		
	L ↓ ground	N ↓ ground	PE ↓ ground		Indication I	Significant fault (>e) No	Yes(remarks)
	without disturbance						
	×			pos			
				neg			
	without disturbance						
		×		pos			
				neg			
	without disturbance						
			×	pos			
				neg			

L＝phase, N = neutral, PE = protective earth

☐ Passed ☐ Failed

Remarks：

Electrical bursts (cont.)

b) I/O circuits and communication lines

Application N° ----------

Pattern designation: ----------

Date: ----------

Observer: ----------

Verification scale interval e: ----------

Resolution during test (smaller than e): ----------

	At start	At max	At end	
Temp:				℃
Rel. h:				%
Time:				
Bar. pres:				hPa

(only class I)

I/O signals, data and control lines: test voltage 0.5 kV, duration of the test 1 min at each polarity

Small test load	Cable/Interface	Polarity	Polarity Result		
			Indication I	Significant fault (>e)	
				No	Yes(remarks)
without disturbance					
		pos			
		neg			

Explain or make a sketch indicating where the clamp is located on the cable; if necessary, use additional page.

☐ Passed ☐ Failed

Remarks：

12.3 Electrostatic discharges (B.3.3)

a) Direct application

Application N° ----------

Pattern designation: ----------

Date: ----------

Observer: ----------

Verification scale interval e: ----------

Resolution during test (smaller than e): ----------

	At start	At max	At end	
Temp:				℃
Rel. h:				%
Time:				
Bar. pres:				hPa

(only class I)

☐ Contact discharges ☐ Paint penetration

☐ Air discharges Polarity(*): ☐ pos ☐ neg

Small test load	Discharges			Result		
	Test voltage (kV)	Number of discharges ≥10	Repetition interval (s)	Indication I	Significant fault (>e) No	Yes (remarks, test points)
	without disturbance					
	2					
	4					
	6					
	8 (air discharges)					

☐ Passed ☐ Failed

Remarks:

Note: If the EUT fails, the test point at which this occurs shall be recorded.

(*) IEC 61000-4-2 specifies that the test shall be conducted with the most sensitive polarity.

Electrostatic discharges (cont.)

b) Indirect application (contact discharges only)

Application N° ----------

Pattern designation: ----------

Date: ----------

Observer: ----------

Verification scale interval e: ----------

Resolution during test (smaller than e): ----------

	At start	At max	At end	
Temp:				℃
Rel. h:				%
Time:				
Bar. pres:				hPa

(only class I)

Polarity(*): ☐ pos ☐ neg

Horizontal coupling plane

Small test load	Discharges Result			Discharges Result		
	Test voltage (kV)	Number of discharges ≧10	Repetition interval (s)	Indication I	Significant fault (>e) No	Yes (remarks, test points)
	without disturbance					
	2					
	4					
	6					

Vertical coupling plane

Small test load	Discharges Result			Discharges Result		
	Test voltage (kV)	Number of discharges ≧10	Repetition interval (s)	Indication I	Significant fault (>e) No	Yes (remarks, test points)
	without disturbance					
	2					
	4					
	6					

☐ Passed ☐ Failed

Remarks: If EUT fails, the test point at which this occurs shall be recorded.

(*) IEC 61000-4-2 specifies that the test shall be conducted with the most sensitive polarity.

Electrostatic discharges (cont.)

Specification of test points of EUT (direct application), e.g. by photos or sketches

a) Direct application

Contact discharges:

Air discharges:

b) Indirect application

12.4 Immunity to radiated electromagnetic fields (B.3.4)

Application N° ----------

Pattern designation: ----------

Date: ----------

Observer: ----------

	At start	At max	At end	
Temp:				℃
Rel. h:				%
Time:				
Bar. pres:				hPa

Rate of sweep: [ ]

Load: [ ] Material load:

Disturbance				Result		
Antenna	Frequency range (MHz)	Polarization	Facing EUT	Indication I	Significant fault (>e) No	Yes (remarks)
without disturbance						
		Vertical	Front			
			Right			
		Horizontal	Left			
			Rear			
		Vertical	Front			
			Right			
		Horizontal	Left			
			Rear			

Frequency range: 26-1000 MHz

Field strength: 3 V/m

Modulation: 80 % AM, 1 kHz sine wave

[ ] Passed [ ] Failed

Remarks:

Note: If EUT fails, the frequency at which this occurs shall be recorded.

Immunity to radiated electromagnetic fields (cont.)

Description of the set-up of EUT, e.g. by photos or sketches:

13 DAMP HEAT, STEADY STATE (B.2.2)

a) Initial test (at reference temperature)

Application N° ----------

Pattern designation: ----------

Date: ----------

Observer: ----------

Verification scale interval e: ----------

Resolution during test (smaller than e): ----------

	At start	At max	At end	
Temp:				℃
Rel. h:				%
Time:				
Bar. pres:				hPa

(only class I)

Automatic zero-setting and zero-tracking device is:

☐ Non-existent ☐ Not in operation ☐ Out of working range ☐ In operation

$E = I + 1/2\ e - \Delta L - L$

$E_c = E - E_0$ with E_0 = error calculated at or near zero(*)

Load	Indication I		Add. load Δ L		Error E		Corrected error E_c		mpe
	↓	↑	↓	↑	↓	↑	↓	↑	
(*)					(*)				

☐ Passed ☐ Failed

Remarks:

DAMP HEAT, STEADY STATE (cont.)

b) Test at high temperature and 85 % relative humidity

Application N° ----------

Pattern designation: ----------

Date: ----------

Observer: ----------

Verification scale interval e: ----------

Resolution during test (smaller than e): ----------

	At start	At max	At end	
Temp:				℃
Rel. h:				%
Time:				
Bar. pres:				hPa

(only class Ⅰ)

Automatic zero-setting and zero-tracking device is:

☐ Non-existent ☐ Not in operation ☐ Out of working range ☐ In operation

$E = I + 1/2\ e - \Delta L - L$

$E_c = E - E_0$ with E_0 = error calculated at or near zero(*)

Load	Indication I		Add. load ΔL		Error E		Corrected error E_c		mpe
	↓	↑	↓	↑	↓	↑	↓	↑	
(*)					(*)				

☐ Passed ☐ Failed

Remarks:

DAMP HEAT, STEADY STATE (cont.)

c) Final test (at reference temperature)

Application N° ----------

Pattern designation: ----------

Date: ----------

Observer: ----------

Verification scale interval e: ----------

Resolution during test (smaller than e): ----------

	At start	At max	At end	
Temp:				℃
Rel. h:				%
Time:				
Bar. pres:				hPa

(only class I)

Automatic zero-setting and zero-tracking device is:

☐ Non-existent ☐ Not in operation ☐ Out of working range ☐ In operation

$E = I + 1/2\ e - \Delta L - L$

$E_c = E - E_0$ with E_0 = error calculated at or near zero(*)

Load L	Indication I		Add. load Δ L		Error E		Corrected error E_c		mpe
	↓	↑	↓	↑	↓	↑	↓	↑	
(*)					(*)				

☐ Passed ☐ Failed

Remarks:

14 SPAN STABILITY (B.4)

Application N° ----------
Pattern designation: ----------
Verification scale interval e: ----------
Resolution during test (smaller than e): ----------

Automatic zero-setting and zero-tracking device is:

☐ Non-existent ☐ Not in operation ☐ Out of working range ☐ In operation

Test load =

Measurement N° 1: Initial measurement

Date: ----------
Observer: ----------
Location: ----------

	At start	At max	At end	
Temp:				℃
Rel. h:				%
Time:				
Bar. pres:				hPa

$E_0 = I_0 + 1/2\ e - \Delta L_0 - L_0$ $E_L = I_L + 1/2\ e - \Delta L_L - L_L$

	Indication of zero (I_0)	Add. load (ΔL_0)	E_0	Indication of load (I_L)	Add. load (ΔL)	E_L	$E_L - E_0$	Corrected value (*)
1								
2								
3								
4								
5								

(*) When applicable, necessary corrections resulting from variations of temperature, pressure, etc.. See remarks.

Average error = average $(E_L - E_0)$ = ☐

$(E_L - E_0)_{max} - (E_L - E_0)_{min}$ = ☐

0.1 e = ☐

If $\left|(E_L - E_0)_{max} - (E_L - E_0)_{min}\right| \leqq 0.1$ e the loading and reading will be sufficient for each of the subsequent measurements; if not, five loadings and readings shall be performed at each measurement.

Remarks:

SPAN STABILITY (cont.)

Subsequent measurements

For each of the subsequent measurements (at least 7), indicate on the line "conditions of the measurement", as appropriate, if the measurement has been performed:

- after the temperature test, the EUT having been stabilized for at least 16 h;
- after the humidity test, the EUT having been stabilized for at least 16 h;
- after the EUT has been disconnected from the mains for at least 8 h and then stabilized for at least 5 h;
- after any change in the test location;
- under any other specific condition.

Measurement N° 2:

Date: ----------

Observer: ----------

Location: ----------

	At start	At max	At end	
Temp:				℃
Rel. h:				%
Time:				
Bar. pres:				hPa

Conditions of the measurement:

$E_0 = I_0 + 1/2\ e - \Delta L_0 - L_0$ $E_L = I_L + 1/2\ e - \Delta L_L - L_L$

	Indication of zero (I_0)	Add. load (ΔL_0)	E_0	Indication of load (I_L)	Add. load (ΔL)	E_L	$E_L - E_0$	Corrected value (*)
1								
2								
3								
4								
5								

(*) When applicable, necessary corrections resulting from variations of temperature, pressure, etc.. See remarks.

If five loadings and readings have been performed:

Average error = average ($E_L - E_0$) = [ ]

Remarks:

SPAN STABILITY (cont.)

Measurement N° 3:

Date: ----------

Observer: ----------

Location: ----------

	At start	At max	At end	
Temp:				℃
Rel. h:				%
Time:				
Bar. pres:				hPa

Conditions of the measurement:

$E_0 = I_0 + 1/2\ e - \Delta L_0 - L_0$ $E_L = I_L + 1/2\ e - \Delta L_L - L_L$

	Indication of zero (I_0)	Add. load (ΔL_0)	E_0	Indication of load (I_L)	Add. load (ΔL)	E_L	$E_L - E_0$	Corrected value (*)
1								
2								
3								
4								
5								

(*) When applicable, necessary corrections resulting from variations of temperature, pressure, etc.. See remarks.

If five loadings and readings have been performed:

Average error = average ($E_L - E_0$) = [ ]

Remarks:

Measurement N°4:

Date: ----------

Observer: ----------

Location: ----------

	At start	At max	At end	
Temp:				℃
Rel. h:				%
Time:				
Bar. pres:				hPa

Conditions of the measurement:

$E_0 = I_0 + 1/2\ e - \Delta L_0 - L_0$ $E_L = I_L + 1/2\ e - \Delta L_L - L_L$

	Indication of zero (I_0)	Add. load (ΔL_0)	E_0	Indication of load (I_L)	Add. load (ΔL)	E_L	$E_L - E_0$	Corrected value (*)
1								
2								
3								
4								
5								

(*) When applicable, necessary corrections resulting from variations of temperature, pressure, etc.. See remarks.

If five loadings and readings have been performed:

Average error = average ($E_L - E_0$) = [ ]

Remarks:

SPAN STABILITY (cont.)

Measurement N° 5:

Date: ----------

Observer: ----------

Location: ----------

	At start	At max	At end	
Temp:				℃
Rel. h:				%
Time:				
Bar. pres:				hPa

Conditions of the measurement:

$E_0 = I_0 + 1/2\ e - \Delta L_0 - L_0$ $E_L = I_L + 1/2\ e - \Delta L_L - L_L$

	Indication of zero (I_0)	Add. load (ΔL_0)	E_0	Indication of load (I_L)	Add. load (ΔL)	E_L	$E_L - E_0$	Corrected value (*)
1								
2								
3								
4								
5								

(*) When applicable, necessary corrections resulting from variations of temperature, pressure, etc.. See remarks.

If five loadings and readings have been performed:

Average error = average ($E_L - E_0$) = [ ]

Remarks:

Measurement N° 6:

Date: ----------

Observer: ----------

Location: ----------

	At start	At max	At end	
Temp:				℃
Rel. h:				%
Time:				
Bar. pres:				hPa

Conditions of the measurement:

$E_0 = I_0 + 1/2\ e - \Delta L_0 - L_0$ $E_L = I_L + 1/2\ e - \Delta L_L - L_L$

	Indication of zero (I_0)	Add. load (ΔL_0)	E_0	Indication of load (I_L)	Add. load (ΔL)	E_L	$E_L - E_0$	Corrected value (*)
1								
2								
3								
4								
5								

(*) When applicable, necessary corrections resulting from variations of temperature, pressure, etc.. See remarks.

If five loadings and readings have been performed:

Average error = average ($E_L - E_0$) = [ ]

Remarks:

SPAN STABILITY (cont.)

Measurement N° 7:

Date: ----------

Observer: ----------

Location: ----------

	At start	At max	At end	
Temp:				℃
Rel. h:				%
Time:				
Bar. pres:				hPa

Conditions of the measurement:

$E_0 = I_0 + 1/2\ e - \Delta L_0 - L_0$ $E_L = I_L + 1/2\ e - \Delta L_L - L_L$

	Indication of zero (I_0)	Add. load (ΔL_0)	E_0	Indication of load (I_L)	Add. load (ΔL)	E_L	$E_L - E_0$	Corrected value (*)
1								
2								
3								
4								
5								

(*) When applicable, necessary corrections resulting from variations of temperature, pressure, etc.. See remarks.

If five loadings and readings have been performed:

Average error = average ($E_L - E_0$) = [ ]

Remarks:

Measurement N° 8:

Date: ----------

Observer: ----------

Location: ----------

	At start	At max	At end	
Temp:				℃
Rel. h:				%
Time:				
Bar. pres:				hPa

Conditions of the measurement:

$E_0 = I_0 + 1/2\ e - \Delta L_0 - L_0$ $E_L = I_L + 1/2\ e - \Delta L_L - L_L$

	Indication of zero (I_0)	Add. load (ΔL_0)	E_0	Indication of load (I_L)	Add. load (ΔL)	E_L	$E_L - E_0$	Corrected value (*)
1								
2								
3								
4								
5								

(*) When applicable, necessary corrections resulting from variations of temperature, pressure, etc.. See remarks.

If five loadings and readings have been performed:

Average error = average ($E_L - E_0$) = [ ]

Remarks:

14 SPAN STABILITY (B.4)

Application N° ----------

Pattern designation: ----------

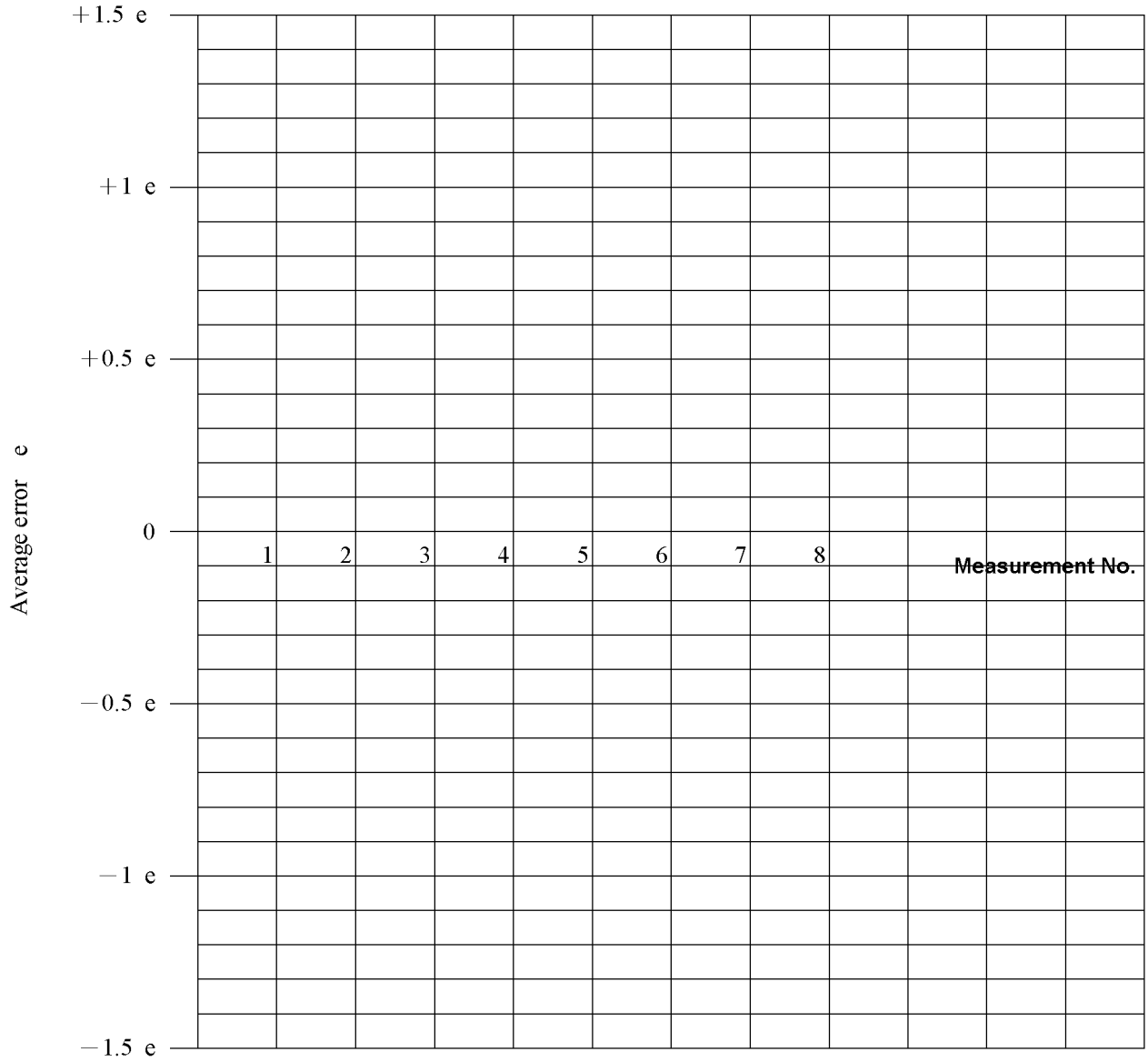

Maximum allowable variation:

☐ Passed ☐ Failed

Remarks:

15 ENDURANCE (A.6)

Application N° ----------
Pattern designation: ----------
Verification scale interval e: ----------
Resolution during test (smaller than e): ----------

Automatic zero-setting and zero-tracking device is:

☐ Non-existent ☐ Not in operation ☐ Out of working range ☐ In operation

a) Initial test

Date: ----------
Observer: ----------

	At start	At max	At end	
Temp:				℃
Rel. h:				%
Time:				
Bar. pres: (if applicable)				HPa

$E = I + 1/2\ e - \Delta L - L$

$E_c = E - E_0$ with E_0 = error calculated at or near zero(*)

Load	Indication I		Add. load Δ L		Error E		Corrected error E_c		mpe
	↓	↑	↓	↑	↓	↑	↓	↑	
(*)					(*)				

ENDURANCE TEST (cont.)

b) Performance of the test

Number of loadings: ☐ Load applied: ☐

c) Final test

Date: ----------

Observer: ----------

	At start	At max	At end	
Temp:				℃
Rel. h:				%
Time:				
Bar. pres: (if applicable)				HPa

$E = I + 1/2\ e - \Delta L - L$

$E_c = E - E_0$ with E_0 = error calculated at or near zero(*)

Durability error due to wear and tear $= \left| E_{c\ initial} - E_{c\ final} \right|$ (**)

Load	Indication I		Add. load ΔL		Error E		Corrected error E_c		mpe	Durability error due to wear and tear(**)
	↓	↑	↓	↑	↓	↑	↓	↑		
(*)					(*)					

☐ Passed ☐ Failed

Remarks:

16 EXAMINATION OF THE CONSTRUCTION OF THE INSTRUMENT

Use this page to indicate any description or information pertaining to the instrument, additional to that already contained in this report and in the accompanying national type approval or OIML certificate. This may include a picture of the complete instrument, a description of its main components, and any remark which could be useful for authorities responsible for the initial or subsequent verifications of individual instruments built according to the pattern. It may also include references to the manufacturer description.

Description:

Remarks:

CHECKLIST

This checklist has been developed based on the following principles:

- to include requirements that cannot be tested according to tests 1 through 15 above, but that shall be checked experimentally, e.g. the operating range of the tare device (4.6.4), or visually, e.g. the descriptive markings (7.1);
- to include requirements which indicate prohibitions of some functions, e.g. automatic tare device for instruments for direct sales to the public (4.14.3.3);
- to include neither general requirements, e.g. suitability for use (4.1.1.2), nor weights and verification devices, e.g. auxiliary verification devices (4.9);
- not to include requirements that allow functions or devices to be used, e.g. a combined semi-automatic zero-setting and tare device operated by the same key (4.5.4).

This checklist is intended to serve as a summary of the results of examinations to be performed and not as a procedure. The items on this checklist are provided to recall the requirements specified in CNPA 76, and they shall not be considered as a substitution to these requirements.

As for non-self-indicating instruments, clause 6 of CNPA 76 shall be followed in lieu of this checklist.

The requirements that are not included in this pattern evaluation report (tests 1 through 15 and checklist 17) are considered to be globally covered by the type approval or OIML certificate (e.g. classification criteria [3.2 and 3.3], suitability for application, use and verification [4.1.1.1, 4.1.1.2 and 4.1.1.3]).

For non-mandatory devices, the checklist provides space to indicate whether or not the device exists and, if appropriate, its type. A cross in the box for "existent" indicates that the device exists and that it complies with the definition given in the terminology; when indicating that a device is non-existent, also check the boxes to indicate that the tests are not applicable (see page 70).

If appropriate, the results stated in this checklist may be supplemented by remarks given on additional pages.

17 CHECKLIST

Application N° ----------

Pattern designation: ----------

17.1 All types of weighing instruments except non-self-indicating instruments (6.1-6.9, CNPA 76)

Requirement	Testing procedures		PASSED	FAILED	Remarks
		Descriptive markings			
7.1.1	**A.3**	**Compulsory in all cases:**			
		manufacturer's mark or name			
		accuracy class			
(+3.3.1)		maximum capacity, Max、Max_1、Max_2、…			
		minimum capacity, Min			
(+3.3.1)		verification scale interval ,e、e_1、e_2、…			
7.1.2	**A.3**	**Compulsory if applicable:**			
		name or mark of manufacturer's agent			
		serial number			
		identification marks on separate but associated units			
		type approval mark			
		scale interval d (d < e)			
		maximum tare effect T (subtractive tare only if T≠Max)			
		maximum safe load, Lim (if Lim > Max＋T)			
		special temperature limits			
		counting ratio			
		ratio between weight platform and load platform			
		range of plus/minus indication			
7.1.3	**A.3**	**Additional markings:**			
		not to be used for direct sales to the public			
		to be used exclusively for:			
		the stamp does not guarantee/guarantees only...			
		to be used only as follows:			
3.2		special applications clearly marked (weighings ranges in Classes (I) and (II) or (III) and (IIII))			
4.16		near display "not to be used for direct sales to the public" (for instruments similar to those used for direct sales to the public)			
7.1.4	**A.3**	**Presentation of markings:**			
		indelible			
		easily readable			
		grouped together in a clearly visible place			
		Max、Min、e and d (d≠e) near display			
		possible to seal and apply a control mark/removal will result in destruction			
7.1.5.1	**A.3**	**Instruments with several load receptors and load measuring**			
		identification mark, Max, Min and e of each load receptor on relating load measuring device (Lim and T＝＋if applicable)			

7.1.5.2	A.3	**Separately-built main parts:**			
		identification mark repeated in descriptive markings			
4.1.1.3		**Identification of devices:**			
		which have been subject to separate type examination			
		Verification marks and sealing			
7.2.1	A.3	**Verification mark:**			
		cannot be removed			
		easy application			
		visibility without the instrument to be moved when it is in service			
7.2.2		**Verification mark support or space:**			
		which ensures conservation of the mark			
		for stamp, stamping area ≧ 200 mm^2			
		for self-adhesive type, Ø ≧ 25 mm			
4.1.2.4	A.3	**Securing/sealing:**			
		location			
		form			
		evidence, where software means are used			
4.1.2.5		**Span adjustment device (automatic and semi-automatic):**	Existent☐		Non-existent☐
		external influence impossible after sealing			
4.1.2.6		**Gravity compensation:**	Existent☐		Non-existent☐
		external influence on or access to impossible after sealing			
		Documentation			
8.2.1.1	A.1	**Technical information and data:**			
		specific declaration of the manufacturer			
		specifications of modules			
3.5.4.2	A.1	specifications of components			
8.2.1.2	A.1	fractions p (modules tested separately) i			
		drawings			
		functional description			
5.3.6.1	A.1	technical description with schematic diagrams for internal processing and exchange via interface			
5.3.7		Manufacturer's lower limit of battery votage			
8.2.2	A.2	**Examination of:**			
		documents			
		functions (spotchecks)			
		test reports from other authorities			
		Indicating device			
4.2.1 4.3.1		**Reading:**			
		reliable, easy and unambiguous			
		overall inaccuracy ≦ 0.2 e (analogue indication)			
		size, shape and clarity			
		by simple juxtaposition			
4.2.2.1	A.3	**Units of:**			
		mass			
		price			

4.2.2.1		**Form of indications:**			
		for one indication, one unit of mass			
		scale interval in the form (1,2 or 5) x 10^k			
		same scale interval for all indicating devices, printing devices and tare weighing devices			
4.2.2.2		**Form of digital indication:**			
		at least one figure at right			
		Decimal sign:			
		shall maintain its position (scale interval changed automatically)			
		separate at least one figure to the left and all to the right			
		Zero:			
		indication of zero figures			
		only one non-significant zero to the right			
		for values with decimal sign, non-significant zero only in third position			
4.2.3		**Limits:**			
		preventing of indication above Max + 9 e			
4.2.4		**"Approximate" indication:**	Existent☐		Non-existent☐
		scale interval > Max/100 without being smaller than 20 e			
4.2.5		**Semi-self indicating instruments:**			
		extension of self-indication range ≦ self-indication capacity			
		Analogue indication:			
4.3.1		thickness and length of scale marks			
4.3.2		scale spacing			
4.3.3		limit of movement below zero and above capacity of self-indication			
4.3.4		damping of oscillations of indicating component			
4.4.1		**Changing of digital indication:**			
		after change in load, previous indication not longer than 1 s			
4.4.3		**Extended digital indication:**	Existent☐		Non-existent☐
		not allowed when there is a differentiated scale division			
		while pressing key or			
		at most, 5 s after manual command			
		prevention of printing			
4.4.4		**Digital indications other than primary indications:**	Existent☐		Non-existent☐
		quantities identified by units or symbols or signs thereof			
		weight values (not weighed) shall be clearly identified or			
		display only temporarily on manual command and			
		shall not be printed			
4.4.5		**Digital printing:**	Existent☐		Non-existent☐
		clear and permanent			
		figures≧2 mm high			
		name or symbol of units — above column of values			
		name or symbol of units — behind column of values			
		printing impossible when equilibrium not stable			

4.4.6		**Memory storage:**	Existent☐		Non-existent☐
		storage, transfer, totalizing, etc. inhibited when equilibrium not stable			
3.4.1		**Auxiliary indicating device (Classes (I) and (II) only ;not allowed on multi-interval instruments)**	Existent☐		Non-existent☐
			If existent, type:		
			rider☐	interpolation☐	
			complementary☐		
			differentiated scale division☐		
		only to the right of decimal sign			
3.4.2		d<e≦10 d，e＝10^k kg or e = 1 mg for class (I) with d<1 mg			
		Differences between results			
3.6.3		**Differences:**			
		between multiple indications: ≦ mpe			
		between digital indications and printout: zero			
3.6.4		between two results: ≦ mpe for same load when method of balancing changed (semi-self-indicating)			
		Level indicator	Existent☐		Non-existent☐
3.9.1.1		**Indicator:**			
		fixed firmly			
		visible to the user			
		Limiting value:			
		shows that maximum tilt is being exceeded			
		Zero-setting, -tracking and -indicating	Existent		Non-existent
		Initial zero-setting	☐		☐
		Semi-automatic zero-setting	☐		☐
		Nonautomatic zero-setting	☐		☐
		Zero-tracking	☐		☐
		Zero-indicating	☐		☐
4.5.1		**Effect:**			
		shall not alter Max			
	A.4.2.1	**Overall effect of:**			
		zero-setting			＝ %
		zero-tracking			＝ %
		initial zero-setting			＝ %
4.5.2	**A.4.2.3**	**Accuracy:**			
		deviation≦0.25 e			
		deviation≦0.5 d (auxiliary indicating device)			
4.5.3		**Multiple range:**	Existent☐		Non-existent☐
		effective for greater weighing range (if switching when loaded possible)			
4.5.4		**Control of zero-setting:**			
		separate from that of tare weighing device			
		Semi-automatic zero-setting: functions only			
		in stable equilibrium and			
		if it cancels any previous tare operation			

4.5.5	**A.4.2.2**	**Zero-indicating device (digital indication):**			
		shows deviation≦0.25 e			
		not mandatory if auxiliary indicating device or rate of zero-tracking≧ 0.25 d/s			
4.5.6		**Automatic zero-setting:**			
		operates only when equilibrium stable and			
		indication has remained stable below zero at least 5 seconds			
4.5.7		**Zero-tracking:**			
		operates only when indication at zero or			
		at negative net value equivalent to gross zero and			
		equilibrium stable			
		corrections≦0.5 d/s			
		when operates after tare, the overall effect may be 4 % of Max			
		Tare devices	Existent	Non-existent	
		Tare weighing	☐	☐	
		Tare balancing	☐	☐	
		Combined zero-setting and tare balancing	☐	☐	
		Tare indicating	☐	☐	
		Type: Additive☐ Subtractive☐			
4.6.1		4.1 through 4.4 apply			
4.6.2		**Tare weighing device:**			
		$d_T = d$			
4.6.3	**A.4.6.2**	**Accuracy:**			
		better than ± 0.25 e (electronic instruments and instruments with analogue indication), e = e for multi-interval			
		better than ± 0.5 d (mechanical instruments with digital indication and instruments with auxiliary indicating device)			
4.6.4		**Operation range:**			
		prevention of operation at or below its zero effect — at			
		prevention of operation at or below its zero effect — below			
		prevention of operation above its maximum indicated effect			
4.6.5		**Visibility of operation:**			
		operation indicated			
		net with sign "NET", "Net", "net" or complete word (digital indication)			
		NET disappears if gross displayed temporarily			
		tare value or letter "T" (mechanical adding tare)			
4.6.6		**Subtracting tare:**			
		prevention of use above Max or indication that capacity is reached			
4.6.7		**Multiple range:**			
		operation effective in greater weighing ranges if switching when loaded possible			
4.6.8		**Semi-automatic or automatic tare:**			
		operation only in stable equilibrium			

4.6.9.		**Combined zero/tare:**			
		accuracy (4.5.2)			
		zero indicating device (4.5.5)			
		zero-tracking (4.5.7)			
4.6.10		**Consecutive tare operations:**			
		indicated or printed tare weight values clearly designated (if tare devices operative at the same time)			
4.6.11		**Printing net or gross:**			
		without designation			
		designation: by G or B (gross)			
		by N (only net printed)			
		designation of net and tare by N and T (if net printed with gross and/or tare)			
		instead of G, B, N and T, complete words			
		printing separately net and tare with identification (different tare devices)			
		Preset tare	Existent☐		Non-existent☐
4.7.1		$d_T = d$ or automatically rounded to d			
		transferred from one range to another one with larger e, shall be rounded to the latter (multiple range)			
		tare value ≦ Max_1 Max for the same net weight value (multi-interval) and calculated net value rounded to the scale interval for the same net weight value			
4.7.2		4.6.10 applies			
		cannot be modified/cancelled if tare operated after the preset tare is still in use			
		operates automatically if clearly identified with load			
4.7.3		4.6.5 applies			
		possibility to indicate preset tare			
		if calculated net printed then preset tare value is printed as well			
		4.6.11 applies			
		designation of preset tare by PT or complete word			
		Locking devices	Existent☐		Non-existent☐
4.8.1		**Positions:**			
		only two stable positions			
		weighing only in "weigh" position			
4.8.2		positions clearly shown			
		Multiple ranges	Existent☐		Non-existent☐
4.10		**Weighing ranges:**			
		range in operation clearly indicated			
		selection from smaller to greater range possible at any load (manual)			
		selection from smaller to the following greater range (automatic) possible only for load ≧ Max_i of smaller range			
		selection from a greater to a smaller range only when no load (manual)*			
		selection only from a greater to the smallest range only when no load (automatic)*			
		when no load tare cancelled and zero to ± 0.25 e both automatically (manual and/or automatic selection)(applicable only to the two above requirements marked *)			

Selection between load receptors, transmitting and measuring devices			Existent☐		Non-existent☐
4.11		compensation for unequal no-load effect			
4.11.1		zero-setting without ambiguity and in accordance with 4.5			
4.11.2		weighing impossible while selection			
4.11.3		combinations easy identifiable			
4.11.4					
Load cells			Existent☐		Non-existent☐
4.12.1		$E_{max} \geqq Q \cdot Max \cdot R/N$			
4.12.2		$n_{LC} > n$			
		$n_{LC} \geqq n_i$ (multiple range/multi-interval)			
		multi-interval $DR \leqq 0.5 \cdot e_1 \cdot R/N$ or			
		$n_{LC} \geqq Max_r/e_1$ if DR unknown			
		multiple range $DR \leqq e_1 \cdot R/N$ or			
		$n_{LC} \geqq 0.4 \cdot Max_r/e_1$ if DR unknown			
4.12.3		$v_{min} \leq e \cdot R/\sqrt{N}$ (e = e multiple range/multi-interval)			
"Plus and "minus" comparator instruments					
4.13.1		**Distinction of zones:**			
		by "+" and "-" signs (analogue indication)			
		by inscription (digital indication)			
4.13.2		**Scale:**			
		with at least one scale division d = e on either side of zero and			
		value of d = e shown at either end			
Mechanical counting instruments with unit weigh receptor					
4.18.1		**Scale:**			
		with at least one scale division d = e on either side of zero and			
		value of d = e shown on the scale			
4.18.2		**Counting ratio:**			
		shown clearly above each counting platform or			
		each counting scale mark			

17.2 Instruments for direct sales to the public and price computing and labelling instruments

Requirement	Testing procedures		PASSED	FAILED	Remarks
		Miscellaneous checkings (direct sales to the public)			
4.5.4		**Combined semi-automatic zero-setting device and semi-automatic tare-balancing device operated by the same key:**			
		not allowed			
4.8.1		**"Preweigh" position:**			
		not allowed			
4.14.10		**Counting ratio:**			
		1/10 or 1/100 (mechanical counting instrument)			
4.14.5		**Impossibility of weighing during:**			
		locking operation			
		adding or subtracting weights			
4.14.7		**Auxiliary and extended indicating device:**			
		not allowed			
4.14.9		**When significant fault has been detected (electronic instruments):**			
		visible or audible alarm provided for customer and (1)			
		data transmission prevented (1)			
		until user takes action or cause disappears			
		Indication device (direct sales to the public)			
4.14.6		**Primary indications (4.14.1) to both vendor and customer:** Double display: Existent☐ Non-existent☐			
		weight			
		information about correct zero position			
		tare operation			
		preset tare operation			
		Figures of primary indications:			
		same dimension and			
		high≧9.5 mm (digital devices)			
		Instruments to be used with weights:			
		value of weights possible to distinguish			
		Zero-setting device(direct sales to the public)			
4.14.2		**Non-automatic zero-setting:**			
		with tool only			

(1) Checked by verifying the compliance with documents [ ] or by simulating faults [ ]; this check does not duplicate the disturbance tests 12.1 through 12.4.

Tare device (direct sales to the public)					
4.14.3		**Tare on mechanical instrument with weights receptor:**			
		not allowed			
		Public is allowed to see whether tare:			
		is in use			
		setting is altered			
		only one tare may be in operation at any given time			
		Recalling gross value:			
		with tare or preset tare in operation prohibited			
4.14.3.1		**Non-automatic tare:**			
		displacement of 5 mm at most e			
4.14.3.2		**Semi-automatic tare:**			
		reduction of value of tare not permitted and			
		cancelling of tare effect only if no load on the receptor			
		One of the following conditions fulfilled:			
		tare value indicated permanently in a separate display			
		indicated with sign "-" when no load on the receptor			
		effect cancelled automatically when unloading after net weighing			
4.14.3.3		**Automatic tare:**			
		not allowed			
4.14.4		**Preset tare:**			
		indicated on separate display clearly differentiated from weight display			
		reduction of tare value not permitted and			
		cancelling of tare effect only if no load on the receptor			
		impossible to operate if tare device in operation			
		cancelled at the same time as PLU if associated with PLU			
Price computing instruments and price scales (direct sales to the public)					
4.15.1		**Visible to both vendor and customer (4.14.6):**			
		unit price			
		price to pay			
		if applicable number, unit price and price to pay for non-weighed articles, price totals			
4.15.2 4.2 4.3.1-4.3.3		**Price scales:**			
		4.2 and 4.3.1 through 4.3.3 apply to unit price and price to pay scales			
		error of price scale $\lvert W \cdot U - P \rvert \leqq e \cdot U$			
4.15.3		**Price computing:**			
		multiplication of weight and unit price as indicated			
		rounding to nearest interval of price to pay			
		unit price: Price/(100 g or kg)			
		Indications of weights, unit price and price to pay visible:			
		for at least 1 s after stable weight indication after any introduction of unit price and while load on load receptor			
		freezing for ≦3 sand not possible to introduce or change unit price (if indication has been stable before and would otherwise be zero)			
		printing weight, unit price and price to pay			

		Stored in memory:			
		before printing			
		same data not to be printed twice for customer			
4.15.4		**Additional functions for trade and management:**			
		if all transactions are printed for customer and			
		shall not lead to confusion			
4.15.4.1		**Prices-to-pay (positive or negative) of non-weighed articles:**			
		weight indication zero or			
		weighing mode inoperative			
		prices shall be shown on price-to-pay display			
		Prices for more than one equal articles:			
		number of articles shown on weight or supplementary display and			
		without being taking for a weight and			
		article price shown on unit price or supplementary display			
4.15.4.2		**Totalization of transactions on one or several tickets:**			
		price total indicated on price-to-pay display and			
		printed accompanied by a special word or symbol and			
		reference to commodities whose prices are totalized if a separate ticket is issued for total			
		all prices-to-pay shall be printed and price total shall be the algebraic sum of these prices			
		Totalization of transactions from linked instruments:			
		price-to-pay scale intervals of all connected instruments identical			
4.15.4.3		**Instrument used by several vendors or to serve more than one customer at the same time:**			
		connection between transactions and vendor or customer identified			
4.15.4.4		**Cancelling previous transactions:**			
		price-to-pay cancelled shall be printed with comment (transaction already printed)			
		transaction clearly differentiated from normal transactions (transaction displayed to customer)			
4.15.4.5		**Printing additional information:**			
		clearly correlated to transaction and			
		does not interfere with assignment of weight value to unit symbol			
4.15.5		**Self-service instruments:**			
		designation of product			
		Price labelling instruments			
4.17		**Display:**			
		for weight			
		possibly to verify values of unit price and preset tare during the use of the instrument			
		Printing:			
		prevention of printing below Min			
		labels with fixed values of weight, unit price and price-to-pay allowed provided weighing mode made inoperative			

17.3 Electronic weighing instruments

Requirement	Testing procedures		PASSED	FAILED	Remarks
		Disturbances			
5.2		**Acting upon significant faults in case 5.1.1, b):**			
		instrument made automatically inoperative (1), or			
		visual or audible indication until user takes action or fault disappears (1)			
5.1.1		not confusing with other messages that appear in the display			
		Display check			
5.3.1		**Upon switch-on:**			
		signs of indication are active and non-active long enough to be checked by operator			
		External equipment			
5.3.6		**Interface shall not allow:**			
		-functions and measuring data to be inadmissibly influenced by peripheral devices or other connected instrument or disturbance			
5.3.6.1		-displaying data which could be mistaken for weighing result			
		-falsifying weighing results (displayed, processed, stored)			
		-changing adjustment factor or adjusting the instrument (except authorized cases)			
		-falsifying displayed primary indications (direct sales)			
5.3.6.2		need not be secured if functions in 5.3.6.1 cannot be performed or initiated			
5.3.6.3		shall transmit data so that peripheral device can meet requirements			
5.3.6		Functions performed or initiated through the interface meet relevant requirements of clause 4 requirements			
5.3.7		**Battery operated instrument: if voltage below manufacturer's specified value**			
		continues to function correctly or			
		indicates no weight			

(1) Checked by verifying the compliance with documents [ ] or by simulating faults [ ]; this check does not duplicate the disturbance tests 12.1 through 12.4.

17.4 Special Interim Provisions

Requirement	Testing procedures		PASSED	FAILED	Remarks
Use of auxiliary units of measurement					
9.1		**Provisions for the use of auxiliary units of measurement**			
		shows indication in legal units of measurement			
9.1.1		used Tai-*Chin*, Tai-*Liang* and Tai-*Chien*,			
		Conversions between auxiliary units of measurement：			
		1 Tai-Chin =0.6 kg			
		1 Tai-Liang =37.5g			
		1 Tai-Chin =16 Tai-Liang			
		1 Tai-Liang =10 Tai-Chien			
9.1.2.1		shall be capable of being correctly converted and rounded to the nearest scale interval			
		minimum capacity≧that in legal units of measurement			
		maximum capacity≦that in legal units of measurement			
9.1.2.2		The scale interval close to the verification scale interval in legal units of measurement			
		The number of scale intervals close to the number of verification scale intervals in legal units of measurement			
9.1.2.3		If the accuracy class is different from that in legal units of measurement, the weighing instrument shall be classified into the lower accuracy class			
9.1.3.1		**Analog indicating device：**			
		clear scale marking			
		The height of the digits on the scale in legal units of measurement must be at least 1.5 times			
9.1.3.2		**Digital indicating device：**			
		Indication of weighing results shall be clear and readable and clearly different from the decimal point			
9.1.3.3		**Pricing requirements：**			
9.1.3.3.1		price/Tai-Chin or price/Tai-Liang			
9.1.3.3.2		the price to pay shall be calculated and rounded to the nearest interval of price to pay by multiplication of weighting results and unit price in auxiliary units of measurement			
Interim provisions on special applications of price computing weighing					
9.2		**Additional functions for trade and management:**			
		shall not lead to confusion			
9.2.1		**Prices-to-pay (positive or negative) of non-weighed articles:**	Existent☐		Non-existent☐
		weight indication zero or			
		weighing mode inoperative			
		prices shall be shown on price-to-pay display			
		Prices for more than one equal articles:			
		number of articles shown on weight or supplementary display and			
		without being taking for a weight and			
		article price shown on unit price or supplementary display			
		record positive			

9.2.2		**Totalization：**	Existent☐		Non-existent☐
		price total indicated on price-to-pay display and			
		re-display all the weighing results, unit prices and prices to pay totalized			
		price total shall be the algebraic sum of these prices			
9.2.3		**Multi-vendor operation：**	Existent☐		Non-existent☐
		Shall be prohibited			
9.2.4		**Cancellation：**	Existent☐		Non-existent☐
		if transaction displayed to customer that transaction clearly differentiated from normal transactions			
9.2.5		**Additional Information：**	Existent☐		Non-existent☐
		shall not apply			